RFP-3310/1
UC-60

NORTH WIND POWER COMPANY
2 KILOWATT
HIGH RELIABILITY WIND SYSTEM

Phase I - Design and Analysis

Executive Summary

July 1981

D.J. Mayer
J.H. Norton, Jr.

Prepared by

North Wind Power Company, Inc.
P.O. Box 315
Warren, Vermont 05674

For

Rockwell International Corporation
Energy Systems Group
Rocky Flats Plant
Wind Systems Program
P.O. Box 464
Golden, Colorado 80401

Subcontract No. PF-71768-F

As part of the

U.S. DEPARTMENT OF ENERGY
WIND ENERGY TECHNOLOGY DIVISION
FEDERAL WIND ENERGY PROGRAM

Contract No. DE-AC04-76DP03533

North Wind 2 Kilowatt High Reliability Prototype
(1980 Photo)

ABSTRACT

This report presents the results of Phase I of a program to design a 2kw high reliability wind turbine for use in remote locations and harsh environments. In Phase I of the program, a predecessor of the proposed design was procured and tested in a wind tunnel and in the freestream to observe operational characteristics. An analytical procedure was developed for designing and modelling the proposed variable axis rotor control system (VARCS). This was then verified by extensive mobile testing of pre-prototype components. A low speed three phase alternator with a Lundel type rotor was designed. Prototypes were fabricated and tested to refine calculation procedures and develop an effective alternator with appropriate characteristics. A solid state field switching regulator was designed and tested successfully. All necessary support elements were designed and engineered. A complete analysis of system reliability was conducted, including failure mode and effects analyses and reliability, maintenance and safety analyses. Cost estimates were made for a mature product in production rates of 1000 per year. Analysis and testing conducted throughout the first phase is included in this report. Final prototype fabrication and testing will be covered in a subsequent Phase II report.

TABLE OF CONTENTS

	page
Abstract	
List of Figures	ii
List of Tables	ii
Nomenclature	iii
Foreword	v
1.0 Program History	1
2.0 Design Development	4
3.0 System Costs and Cost of Energy	11
4.0 System Reliability	12
5.0 System Specifications	13
APPENDIX - Project Organization and Schedule Charts	15

LIST OF FIGURES

Number	Figure	Page
1	System Schematic	5
2	Master Drawing	6
3	System Cutaway	7
4	Power Curve	8
5	VARCS Operational Mode	9
6	Lundel Schematic	10

LIST OF TABLES

Number	Table	Page
I	Design and Performance Specifications	2
II	Extreme Environmental Conditions	3
III	Reliability Data	12

NOMENCLATURE*

AC - alternating current

AOM - annual operating and maintenance (cost)

ASTM - American Society for Testing of Materials

@ - at

C - centigrade

cc - cubic centimeter

CDR - Critical Design Review

cm - centimeter

dBA - decibels (A-weighted scale)

DC - direct current

^{o} - degrees

F - Fahrenheit

FCR - fixed charge rate

FDR - Final Design Review

ft or ' - foot or feet

gm - gram

Hz - hertz

IC - installed cost

in or " - inch

kg - kilogram

KVA - kilovolt amperes

kw - kilowatt

kwhrs - kilowatt hours

lambda (λ) - failure rate

lb - pound

m - meter

m^2 - square meter

mm - millimeter

mph - miles per hour

MTBF - mean time between failures

N-m - newton meter

NWPCo - North Wind Power Company

---

*Editor's note: While this report contains unconventional nomenclature, internal consistency has been maintained.

Nomenclature (cont'd)

% - per cent

$\pm$ - plus or minus

PDR - Preliminary Design Review

ph - phase

r/R - variation (r) from blade chord line at nondimensional radial station (R) of blade

REA - Rural Electrification Administration

RFP - request for proposals (when used in text)

RPM - revolutions per minute

SWECS - small wind energy conversion system

t - one year

v - volt

VARCS - variable axis rotor control system

FOREWORD

North Wind Power Company (NWPCo) was founded in 1974 with the goal of designing and developing a high performance, cost effective small wind energy conversion system (SWECS) for commercialization inthe remote and residential power markets.

This Executive Summary describes the Phase I design of a 2kw high reliability wind turbine for use in remote locations and harsh environments. Complete details of Phase I are presented in Volume II, Technical Discussions of the North Wind Power Company, Inc., 2kw High Reliability Wind Turbine. This program was conducted under Contract No. PF-71768-F, awarded by Rockwell International Energy Systems Group in January 1978, as a part of the United States Department of Energy's Federal Wind Program. Warren Bollmeier was the Rockwell Technical Monitor and L.D. Cullen was the Rockwell Contract Administrator. Each of these men provided valuable review and guidance throughout the program.

The North Wind personnel who contributed to this effort were: Donald Mayer, David Sellers, John H. Norton, Jr., Arnold Johnson, John Kueffner, Douglas Livingston and Glenn Gazley. Numerous consultants also assisted in the program; among them were Professor John Dugundji of M.I.T., Dutch Greimann, Professor Philip Trickey, James McGuigan, Clint Coleman and Hugh Currin.

The final version of this report was edited by Rockwell International personnel at Rocky Flats to increase internal consistency and help clarify the presentation of important information.

1.0 PROGRAM HISTORY

To achieve design goals, NWPCo conducted an independent investigation of existing SWECS design concepts, from the pre-rural electrification era machines to foreign manufactured units such as the Australian Dunlite and the Swiss Elektro. The conclusion of this study was that certain design features prevalent in the most successful of these wind machines ought to be assimilated into any new SWECS design. Past experience has proven the desirability of the following design features:

1) Upwind Rotor Configuration

The upwind rotor avoids problems of tower shadow and is highly responsive to wind direction variations.

2) Three Bladed Rotor

The three bladed rotor has proven to be a responsive, stable and durable arrangement in both the upwind and downwind configurations.

3) Direct Drive Slow Speed Generator

The most successful pre-REA machines utilized direct drive DC generators which consistently proved more reliable and efficient than geared units. The technical feasibility of designing a low speed generator which operates effectively with a rotor RPM range from 150-300 is well established.

4) Rotor Pitch or Blade Pitch Control

Some older machines utilized blade pitch or rotor tilt-back control systems. Each of these methods proved responsive and durable, but the rotor tilt-back method combines compatibility with the upwind configuration and the advantages of a reduced number of parts stressed in motion and automatic shutdown in high winds. Thus, the rotor tilt-back method was chosen for the NWPCo high reliability design.

An independent NWPCo survey has identified a strong and cost-effective market for SWECS providing a remote primary power supply to commercial users. Possible applications in this market include supplying power for remote microwave repeaters, seismic monitoring stations, navigational aids and galvanic protection systems. The inaccessibility of many remote sites and the harsh environmental conditions frequently encountered demand that the SWECS be able to operate reliably without frequent maintenance. All specifications will cover expected environmental conditions.

When the Department of Energy issued an RFP in May of 1977 for the design and development of a high reliability SWECS for remote power applications,

the experience which North Wind had with reconditioned older machines at remote sites led to the proposal of a baseline design which emphasized the need for simple yet durable components, a minimum of parts stressed in motion, and complete protection from the elements. In order to meet the stringent demands for reliability (see Tables I and II) without compromising performance or cost-effectiveness, NWPCo proposed and was contracted to develop a three bladed, horizontal axis, direct drive system with fixed pitch blades and a tilt-back control system.

TABLE I

Design and Performance Specifications

A) RELIABILITY	The goal is to design for the utmost reliability. The MTBF shall be no less than ten years.
B) MAINTAINABILITY	The design goal shall be a maximum of one scheduled maintenance day per year.
C) DURABILITY	The wind machine shall be designed to operate continuously in extreme weather conditions.
D) POWER OUTPUT	1kw-2kw minimum generated in an air density of 0.00120 gm/cc and at a wind speed of 9 m/s (20 mph) when measured at the height of the center of the swept area of the rotor
E) POWER FORM	The output shall be 26± 2 volts DC, with voltage regulation to control charging of a 24 volt battery system. The wind machine shall be designed to operate independently of the battery storage system, i.e. the wind machine must start and control itself without requiring power from the batteries.
F) CUT-IN WIND SPEED (of the generator)	Minimize with regard to power production and system cost.
G) CUT-OUT WIND SPEED	Maximize with regard to power production and system cost.
H) SURVIVAL WIND SPEED	54 m/s (120 mph) minimum for steady winds. Some applications for these systems could result in their being exposed to severe hurricanes and/or wind storms with gusts to 75 m/s (165 mph) and the system should be designed to withstand this condition. An appropriate safety factor should be chosen to assure this performance.
I) ROTOR SPEED CONTROL	Optional design.
J) YAW CONTROL	Optional design.
K) SYSTEM LIFE GOAL	25 years (minimum).
L) TARGET CAPITAL COST GOAL (For mass-produced unit consisting of rotor, gear train & controls)	$1500/kw (maximum based on the output in a 9 m/s wind). (1977 dollars)

TABLE II

Extreme Environmental Conditions

TEMPERATURE	-70° C. to 60° C. (-94° F. to 140° F.)
RAIN	Torrential downpour accompanied by winds.
SNOW, SLEET, ICING	Ice buildup to 60 mm (2½ inches) thick on rotor, vane, nacelle, etc.
HAIL	Impact by hail up to 40 mm (1½ inches) diameter (golf ball sized).
SALT WATER SPRAY	Heavy ocean spray.
DUST	Fine sand and dust accompanied by persistent winds gusting to 45 m/s (100 mph).
WIND	54 m/s (120 mph) survival steady wind speed, with provisions to withstand gusts to 75 m/s (165 mph) such as would occur during severe hurricanes. An appropriate safety factor will be used to assure this performance.
CORROSIVE ATMOSPHERE	Heavy industrial atmosphere coupled with salt fog or spray.
LIGHTNING	Repeated strikes during severe thunderstorms.
NOISE	The system shall produce no more than 50 dBA when measured at the base of a 12 m (40 ft.) tower in a wind of 9 m/s (20 mph).

2.0 DESIGN DEVELOPMENT

The critical components of the NWPCo system are a 2kw low speed direct drive alternator and a variable axis rotor control system - the VARCS. The VARCS controls rotational speed by pitching the rotor tip path from the vertical to the horizontal plane. This method of speed control is similar to that employed by the Parris-Dunn machines. Both of these components lead to a significant reduction in the number of moving parts. NWPCo's approach to achieving the reliability and maintenance goals of the contract is to emphasize simplicity and ruggedness of design.

NWPCo 2kw SWECS reliability is enhanced by the simplicity of the basic design in which only three assemblies move in respect to one another (see Figure 1). Each of these assemblies is constructed of sub-components which are rigidly attached, thus making up single moving component units. The first assembly consists of the rotor and blades, the main shaft, and the alternator rotor. This assembly rotates on a bearing located within the alternator case (see Figure 2). Experience with remote installations of older units indicated that a high failure rate can be expected in the blade pitch governor due to icing imbalance. Frequent failures were also noted in folding tails (required for maintenance shutdown and high wind protection) due to system vibration and rapid yaw changes. The VARCS method of speed control minimizes these potential failure modes by permitting the use of a fixed pitch rotor and a fixed tail, and by eliminating the need for a separate shutdown and reorientation mechanism. The second assembly consists of the alternator case, the stator and the VARCS plate. Both of the first two assemblies pitch from the vertical to the horizontal on two bearings attached to a hinge pin. This pitching motion is restrained by a spiral torsion spring (see Figure 3). Spring tension automatically reorients the rotor as wind speed decreases. The third assembly is a cast steel saddle to which the tail is connected in a fixed position. This assembly is free to move in yaw in order to orient the machine to wind direction. This "three moving part" overall design concept not only enhances system reliability, but also greatly simplifies manufacturing, installation and maintenance procedures.

The simplicity and ruggedness of the NWPCo design is only effective if it does not compromise the machine's ability to extract maximum power from the wind. System performance and safety require the successful integration of rotor output potential with the alternator torque requirements. Rotor diameter was optimized at five (5) meters. The rotor was designed to drive the low speed alternator producing 2.5 KVA at 250 RPM at the specified nine (9) meter per second wind speed.

The N60 airfoil (12.5%) section was selected for the outer two-thirds of the blade radius. This airfoil exhibits excellent performance characteristics at low Reynolds numbers (below 100,000) during low wind speed turbine start-up. The blade's root structure is enhanced using a G625 airfoil (thickness = 20%). The blade twist goes from 12.5^{o} at the root ($r/R = .1$) to -5° at the tip. This twist provides increased rotor start-up torque, thus maximizing low wind speed output. Each blade tapers from an 8" chord at the root to a 3" chord at the tip which maximizes power

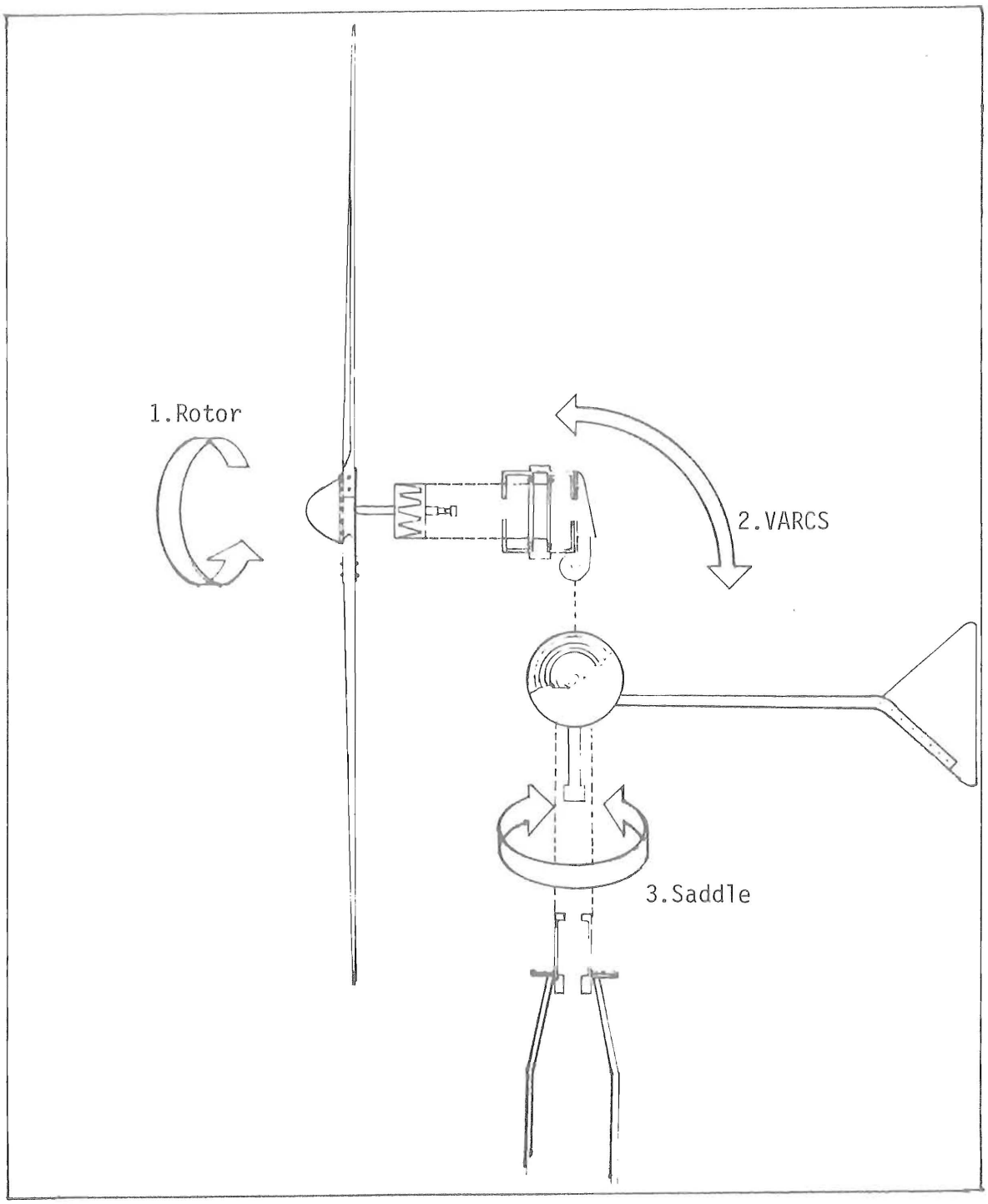

Figure 1

System Schematic

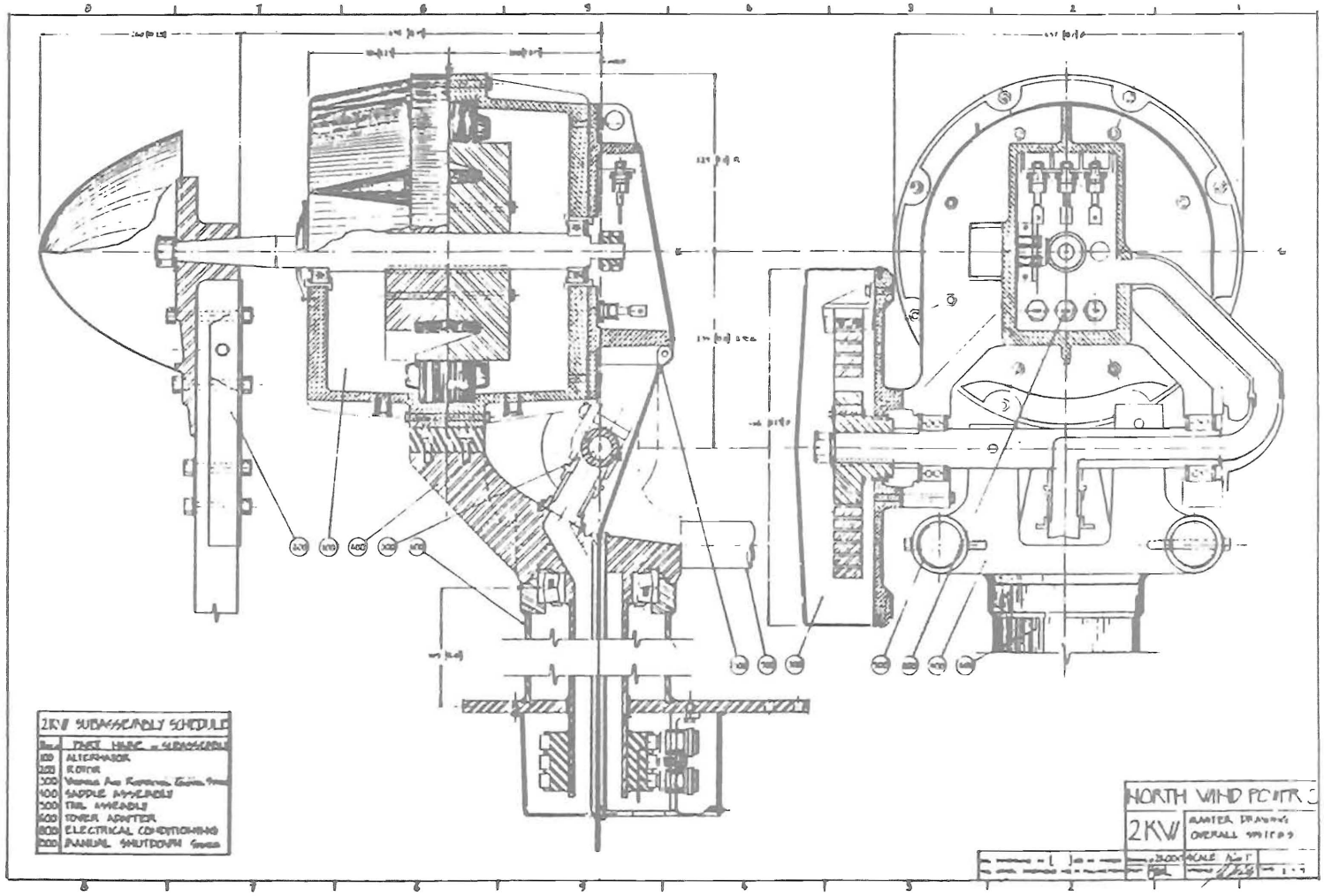

Figure 2

Master Drawing

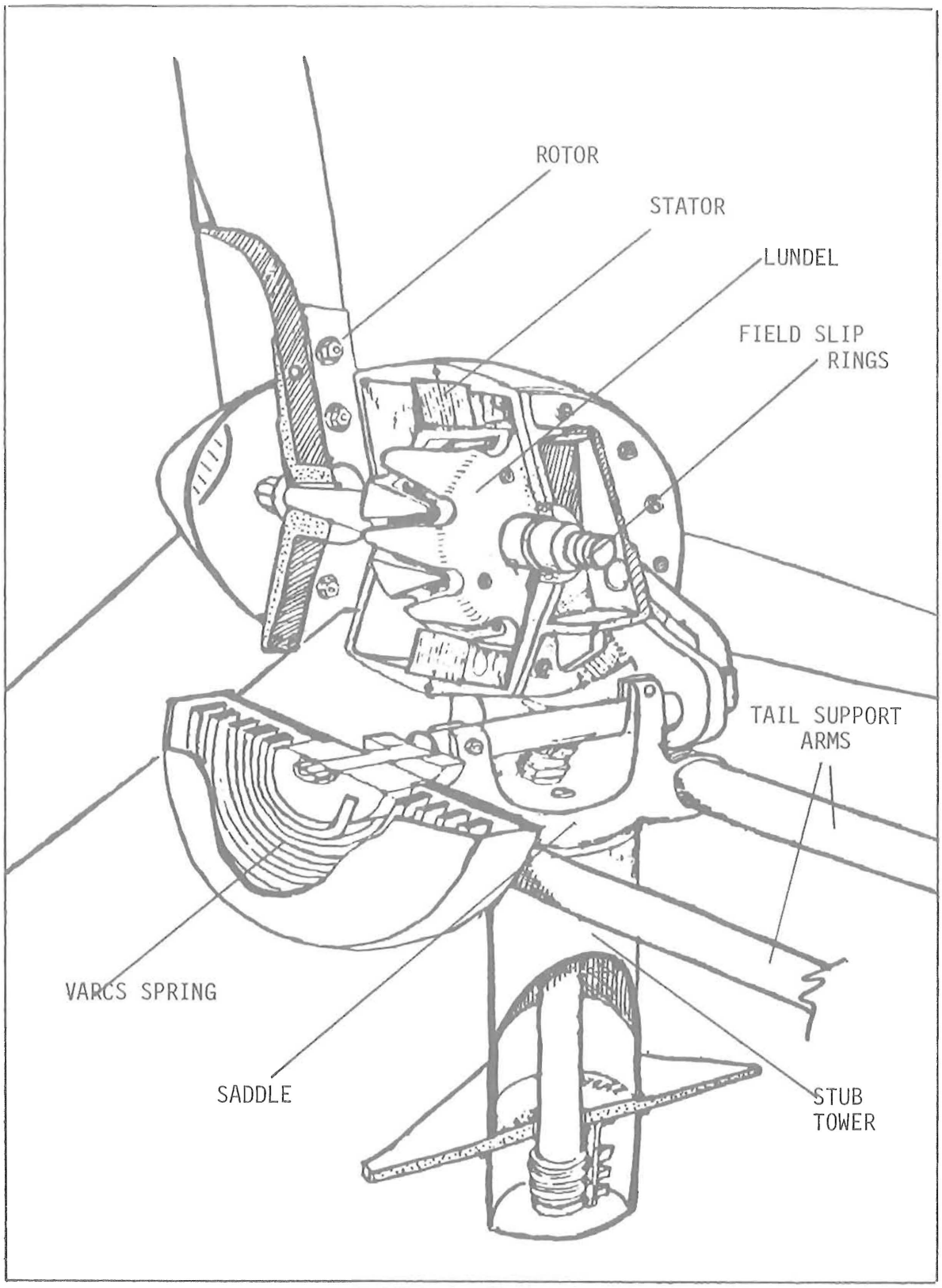

Figure 3

System Cutaway

output and minimizes blade root stress. This blade design is readily fabricated through the use of aircraft grade Sitka spruce which offers an excellent strength-to-weight ratio and is easily carved and finished. NWPCo has identified a moisture permeable polyurethane coating with excellent adhesion and durability which can be easily applied. A 3-M self-adhering polyurethane tape provides the necessary additional leading edge protection.

The sizing of the rotor and alternator was derived through analysis of the wind regime at a microwave repeater site having a 350 kwhr/month load requirement. The speed range and torque requirements of the alternator closely match potential rotor output in an average wind regime. Power production begins at 4.5 m/s (10 mph), with full power being achieved at 9 m/s (20 mph). Rotor speed control begins with initial pitchback at 9.1 m/s (21 mph). Power output decreases through cutout at 22.3 m/s (50 mph), and complete system shutdown at 105 mph (see Figures 4 and 5.)

Independent studies by the NWPCo electrical design team have demonstrated the feasibility of achieving reliability and cost goals through the design of an alternator having a Lundel interdigitated rotor and a standard laminated stator. The Lundel-type rotor consists of two six-fingered castings, opposed on the alternator shaft, with a solenoid-type field coil wound

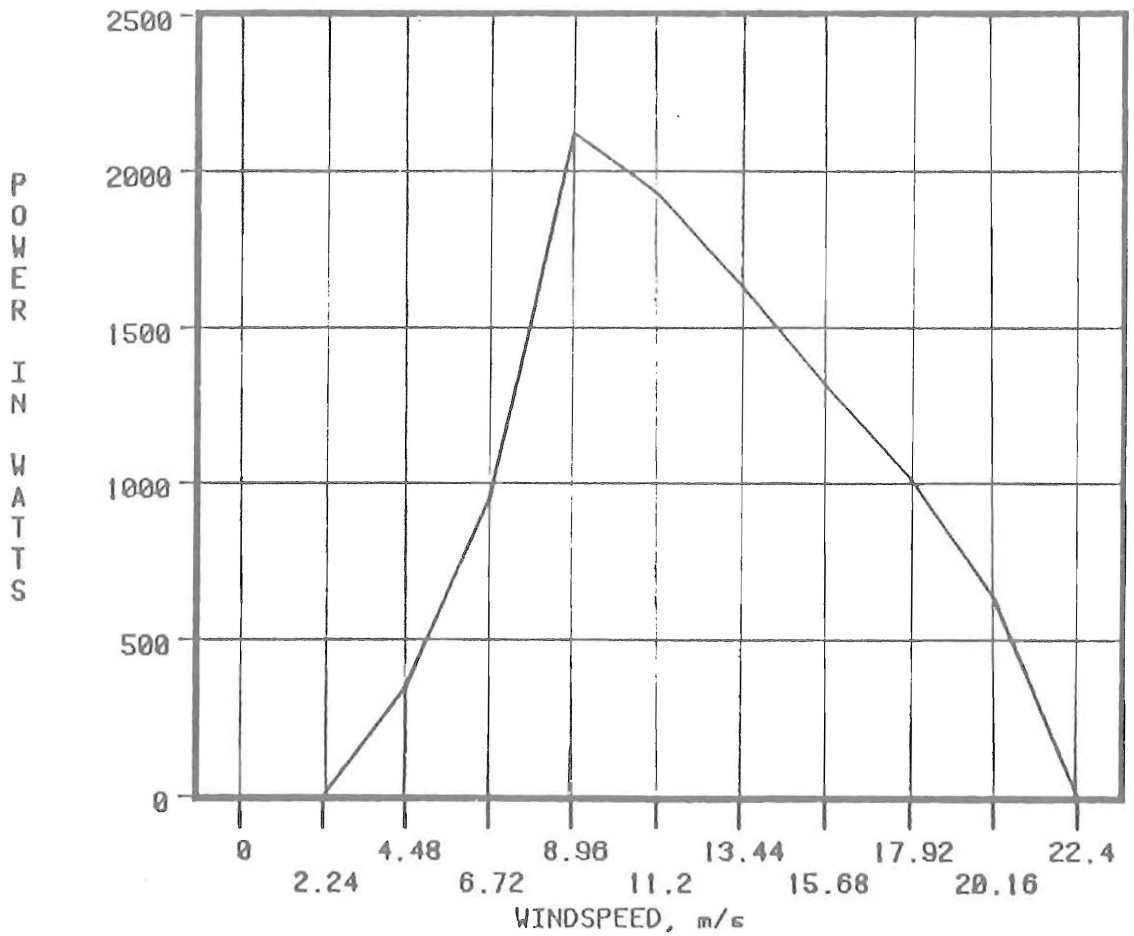

Figure 4

North Wind HR2kw SWECS Power Curve

Figure 5

Variable Axis Rotor Control System (VARCS) Operational Modes

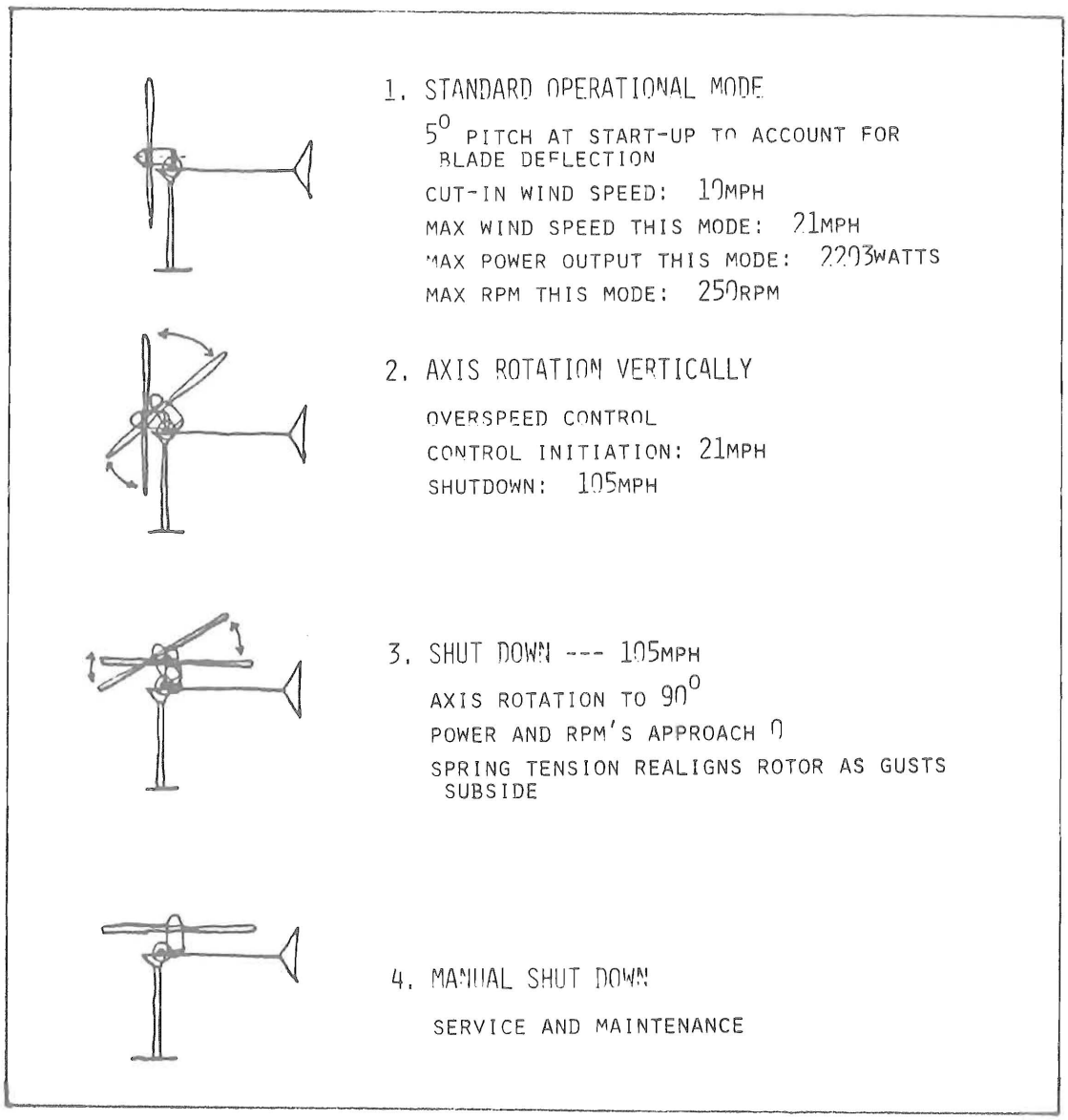

around a steel core between them (see Figure 6). The ease of manufacture and cost-effectiveness of the Lundel have been demonstrated by its use within the automotive industry. The elimination of permanent magnets, rotor laminations and centrifugally stressed windings has further enhanced alternator reliability. The final alternator specification calls for a three-phase, twelve-pole unit, producing 2.9 kw, 32 VAC at 250 RPM.* The AC power is rectified for battery charging. Self-excitation of the alternator occurs at approximately 200 RPM, and line voltage rapidly rises to match battery potential. Since the unit is direct drive, shaft torque requirements prior to self-excitation are minimal (less than 2N-m), allowing easy start-up--a major advantage over geared or permanent magnet machines.

* 32 vDC is required to charge a 24 vDC battery bank due to diode drop (2 vDC), slip-ring losses, and line losses. The 32 vDC alternator will provide 26.4 vDC to the batteries.

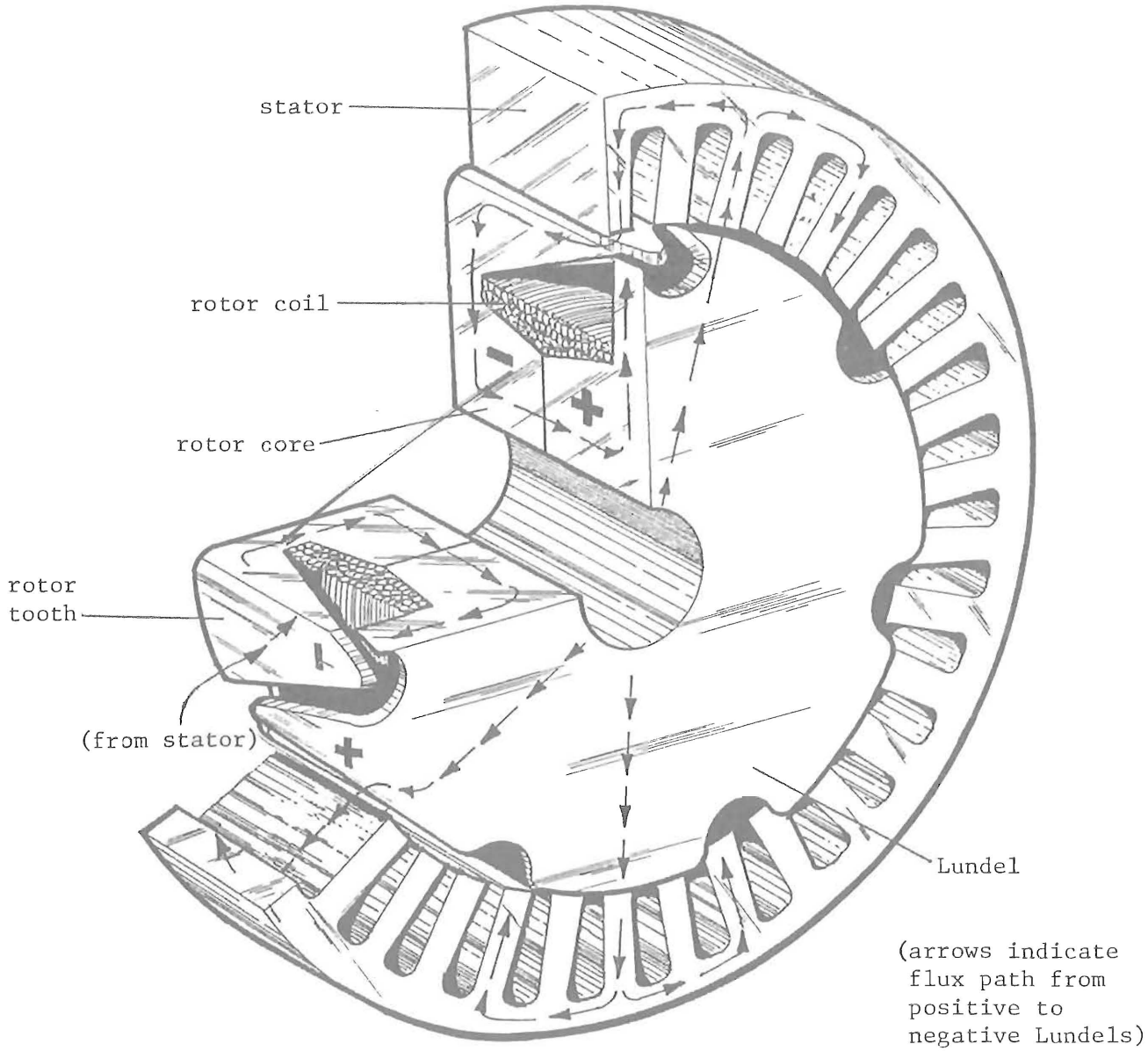

Figure 6

Lundel Alternator Schematic

3.0 SYSTEM COSTS AND COST OF ENERGY

In order for a SWECS to be cost effective in this market, the following criteria must be met:

1) The system must be highly reliable so that power output is consistent, and difficult and expensive repairs are not necessary.

2) Initial cost goals must be competitive with other energy sources.

3) Annual operating and maintenance costs must not be out of proportion with system base costs and performance.

4) System life must be long enough to allow amortization of inital costs.

5) System power output must be suitable to the intended application.

The NWPCo design is directly responsive to these criteria.

The target cost goal for this contract is $1500/kw, with a system life of 25 years (Table I). At the present time, NWPCo's 1000th unit cost projections indicate that the system betters the target cost goals. Projected 1000th unit cost for NWPCo's 2kw high reliability wind turbine is $2,867.00 (1977 dollars). Utilization of the VARCS method of speed control yields significant cost savings in the fixed pitch rotor and alternator which is projected at $319/kw at 1000 units. NWPCo's experience in the design, fabrication and testing of low speed alternators has led to an alternator which achieves cost-effectiveness through such innovations as the Lundel rotor, without compromising reliability or performance.

System Cost (1000th Unit)	
Unit	$2867
Tower	$ 700
Storage	$2000 (24 volts)
Installation	$1200 (site dependent)
TOTAL	$6767

Cost of Energy*	
Installed Cost	$6767
Fixed Charge Rate	.085
Annual Operation & Maintenance Cost	$135
Annual Kilowatt Hours Produced	10,981. (assume 6.7 m/s (15 mph) average)

$$COE = \frac{IC\ (FCR) + AOM}{kwhrs}$$

$$COE = \frac{6767\ (.085) + 135}{7800} = \$.091 \text{ per kilowatt hour}$$

* The fixed charge rate cost of energy calculation method used in this report was specified by Rockwell International to allow comparison of the North Wind High Reliability wind system with other machines developed under DOE sponsorship. The reader should be aware that life cycle costing provides a more accurate cost of energy determination. A good introduction to this method--as it is applied to wind systems--can be found in SWECS Cost of Energy Based on Life Cycle Costing, W.R. Briggs, Rocky Flats Wind Systems Program, RFP-3261, May 1980 (available from NTIS.)

4.0 SYSTEM RELIABILITY

Reliability studies indicate thirteen years MTBF, with a minimum of maintenance--five bearings to grease; fasteners to check; and brushes to replace (depending on the site, blade sets may have to be rotated for refinishing). (See Table III.) The SWECS share of a repeater station's annual maintenance and operation cost is projected to be approximately $135 per year. The system voltage and power form, as well as its low wind speed performance, are specifically designed, based on NWPCo's experience, to meet the needs of the commercial primary power supply market.

This wind system represents the successful culmination of a design philosophy which emphasizes the use of proven concepts enhanced by advances in technology and analytical modeling techniques. Simplicity of design and maintenance reduce annual operating costs while dependability of the direct drive alternator, the VARCS mechanism and the fixed tail and rotor insure that system life goals will be met.

Table III

Reliability Data

System failure rate (per million hours)	8.8
System mean time between failures	13.0

$$(\text{MTBF} = \frac{114}{\lambda})$$

System reliability after 1 year	.926
System reliability after 5 years	.680
" " after 10 years	.462
" " after 25 years	.145

$$(R_t = E^{\frac{-\lambda t}{114}})$$

Note:

Reliability figures are based on the maintenance schedule.

All non-moving structural parts (i.e. bolts, laminations, and fixed castings) are assigned a minimum lambda of .001 failures/million hours.

All moving components subject to failure and wear are assigned a minimum lambda of .07 failures/10^6 hours (except where contrary data is available).

Slip rings, brushes and blades will be replaced and/or refinished as necessary.

Calculations of bearing failure rates are corrected for loads and rotational speeds.

Component lambdas are corrected for estimated real life cycles per hour.

5.0 SYSTEM SPECIFICATIONS

The final design specifications for the North Wind Power Company 2kw High Reliability Wind Turbine are given below.

General Description	3 bladed, horizontal axis, upwind
Physical Description	
Weight (less tower)	356 kg (785 lb)
Rotor Diameter	5 m (16.4 ft)
Tower Height	12.2 m (40 ft)
Operational Characteristics	
Cut-in Wind Speed	3.6 m/s (8 mph)
Speed Control Initiation	9.4 m/s (21 mph)
System Shutdown	47 m/s (105 mph)
Survival Wind Speed	73.7 m/s (165 mph)
Rated Output @ Wind Speed	2.2 kw @ 9.3 m/s (21 mph)
Rotational Speed @ Rated Output	250 RPM @ 2.2 kw
Yearly Output in $\bar{V}$ = 5.36 m/s (12 mph)	6,000 kwhrs
= 6.70 m/s (15 mph)	7,800 kwhrs
= 7.15 m/s (16 mph)	8,400 kwhrs
= 8.04 m/s (18 mph)	9,600 kwhrs
Rotor	
Weight (Blades, Hub)	41 kg (90 lb)
Diameter	5 m (16.4 ft)
Capture Area	19.63 m^2 (2.11.2 ft^2)
Solidity	.04
Tip Speed Ratio	7.5
C_p at Rated Output	.41
Blades	
Material	Sitka spruce (aircraft grade)
Planform	Linear taper from 200 mm (8") @ r/R=.3 to 80 mm (3.1") @ tip
Twist	Non-linear from 12.5° @ r/R=.3 to .5° @ tip
Airfoil	G625 from r/R=.1 to r/R=.3, N60 from r/R=.3 to tip

Hub	
Material	Cast and wrought steel (ASTM 148-73 Class 80-50)
Type	Fixed Pitch
Generator	
Type	3 ph synchronous alternator (Lundel rotor)
Nominal Voltage	24 vDC
Size	458 mm (18") by 368 mm (14.5")
Number of Poles	12
Synchronous Speed @ 25 Hz	250 RPM
Rated Power @ Speed	2.2 kw @ 250 RPM (150' transmission line)
Efficiency	70% @ rated speed and output
Weight	133 kg (295 lb)
Speed Control	
Type	Variable Axis Rotor Control System (VARCS)
Spring	Spiral Torsion Spring K = 71 in.lbs/degree
Pitch Range	5° to 90° (from horizontal to vertical)
Yaw Control	Free yawing
Tower	
Type	Unarco Rohn 45 GSR dbl. guyed
Material	Galvanized Steel
Height	12.2 m (40 ft)
Weight	545 kg (1200 lb)

APPENDIX

Project Organization and Schedule Charts

NORTH WIND POWER COMPANY, INC.

Project Organization - Phase I

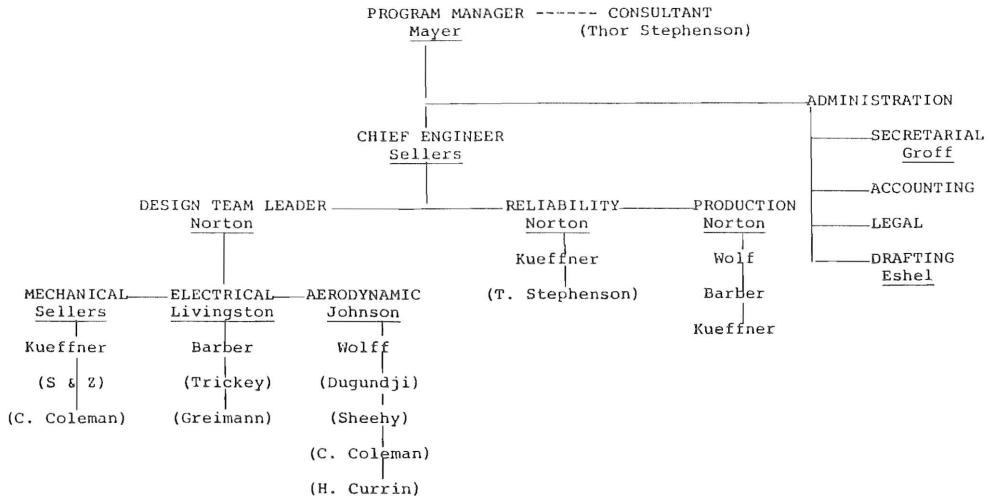

Schedule - Phase I

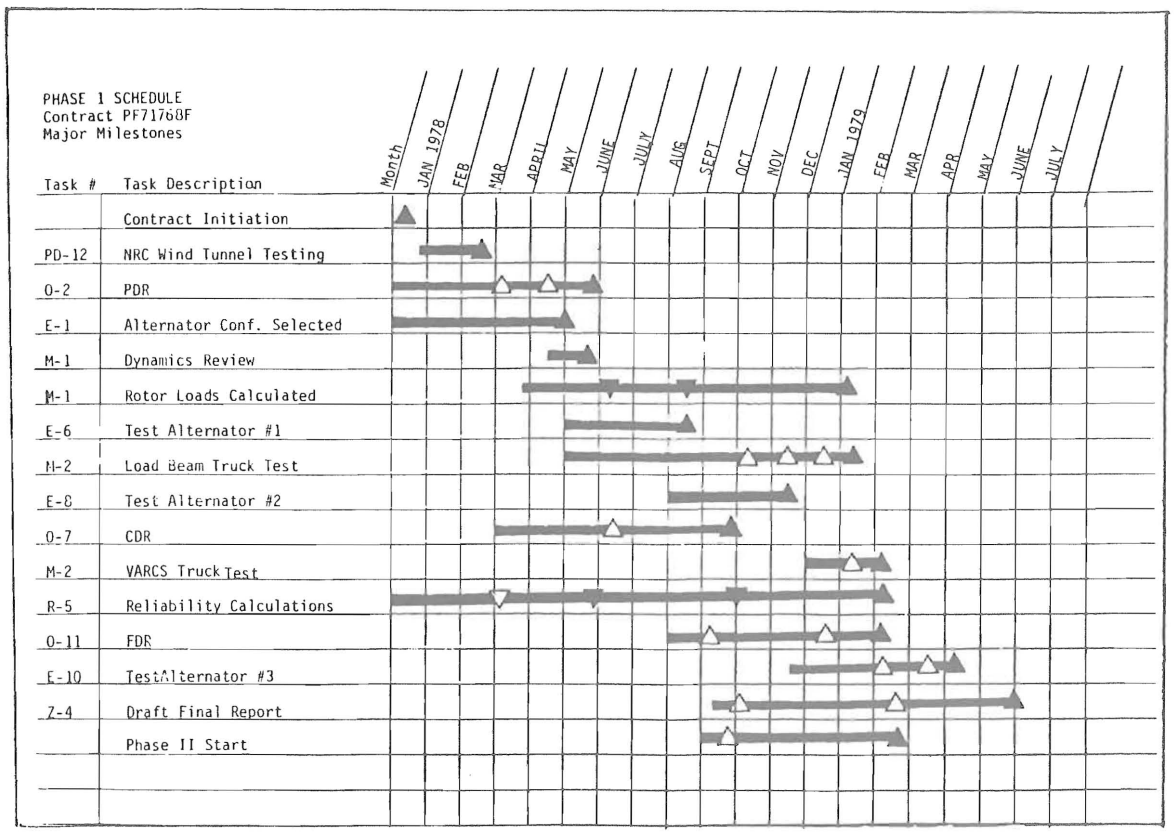

U.S. GOVERNMENT PRINTING OFFICE: 1982—578-281/207 Region No. 8