NREL
NATIONAL RENEWABLE ENERGY LABORATORY

Summary of Ancillary Tools & Pre- & Post-Processors

NREL Wind Turbine Modeling Workshop

August 9, 2013

CU – Boulder, CO (USA)

Jason Jonkman, Ph.D.
Senior Engineer, NREL

NREL is a national laboratory of the U.S. Department of Energy, Office of Energy Efficiency and Renewable Energy, operated by the Alliance for Sustainable Energy, LLC.

Outline

- Key NREL Tools in the Design Process
- AirfoilPrep
- TurbSim
- PreComp
- NuMAD
- BModes
- WT_Perf & HARP_Opt
- MSC.ADAMS, A2AD, & FAST-to-ADAMS
- MCrunch, MExtremes, & MLife
- MBC3
- NWTC Subroutine Library
- Automation Scripts
- A Final Thought

Key NREL Tools in the Design Process

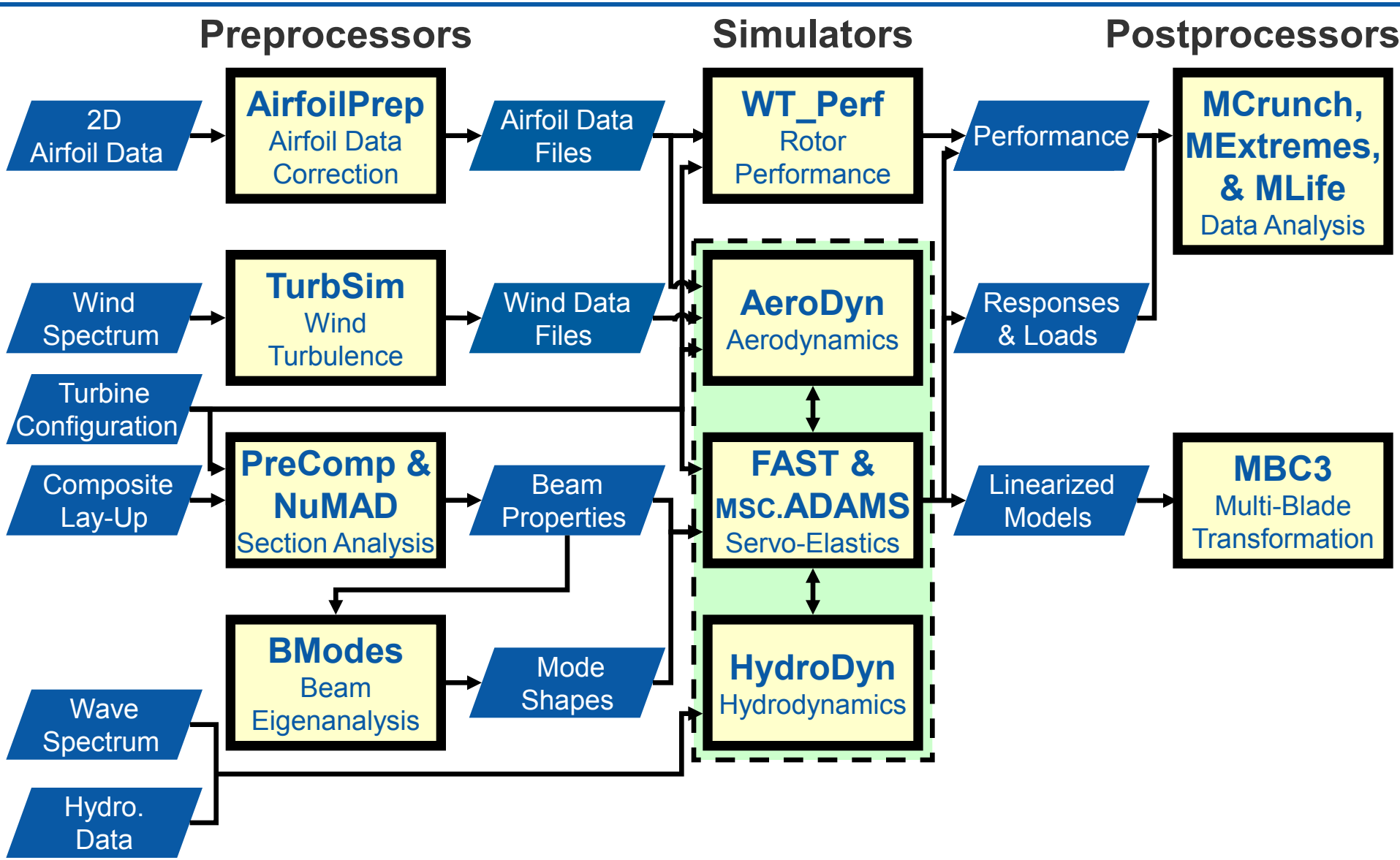

AirfoilPrep

- Generates airfoil data files from 2D data:
  - Blends aerodynamic coefficients
  - Adjusts 2D data for rotational augmentation (3D effects):
    - Selig/Du method for lift (stall delay)
    - Eggers method for drag
  - Extrapolates to high AoA:
    - Uses Viterna method or flat-plate theory for -180º < AoA < 180º data
  - Computes dynamic-stall parameters
- Recent Work – Minor bug fixes
- Future opportunities:
  - Build functionality into **AeroDyn**
  - Include new stall-delay models

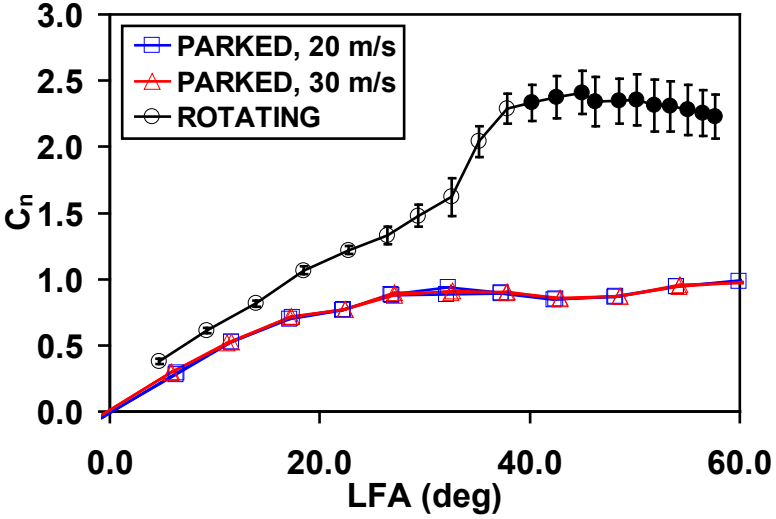

Data from NASA-Ames Wind Tunnel Test of UAE Phase VI

TurbSim

- Computes full-field stochastic wind realizations:
  - Inputs are desired wind profile & turbulence characteristics
  - Includes IEC- & site-specific turbulence models
  - Option to generate coherent structures from LES & DNS output
- Recent work:
  - Added a model for tidal turbines
  - Added option for generating periodic wind for long time series
- Future opportunities:
  - Include additional site-specific turbulence models
  - Add Mann model

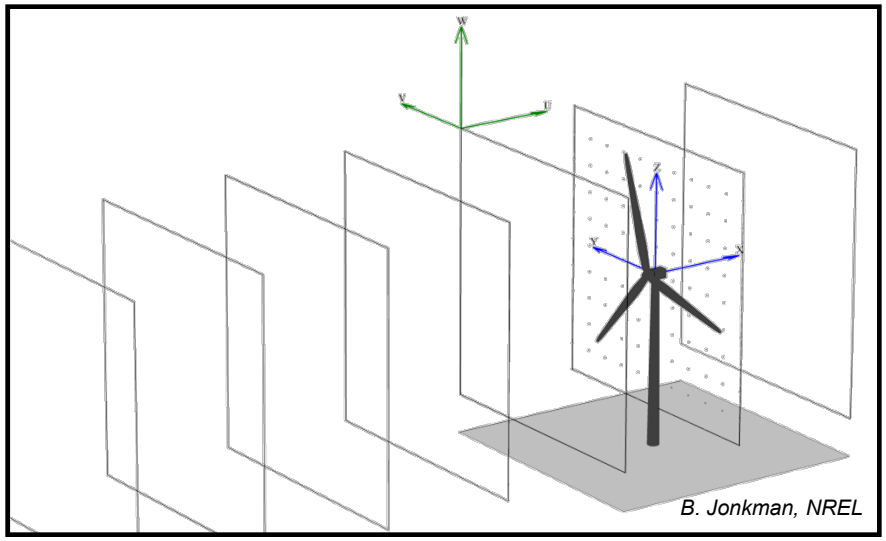

Full-Field Turbulence Grids

PreComp

- Computes coupled section properties of composite blades for beam-type models:
  - Inputs are the airfoil shape & internal lay-up of composite laminas
  - Uses a combined laminate theory (modified) with shear flow approach
- Recent work – Verified **PreComp** against **NuMAD** & **VABS**
- Current & planned – Add inverse-design algorithm
- Future opportunities - Add stress analysis

$$\begin{Bmatrix} F_X \\ M_Y \\ M_Z \\ T_X \end{Bmatrix} = \begin{bmatrix} \overline{EA} & S_{af} & S_{al} & S_{at} \\ S_{af} & \overline{EI}_{flap} & S_{fl} & S_{ft} \\ S_{al} & S_{fl} & \overline{EI}_{lag} & S_{lt} \\ S_{at} & S_{ft} & S_{lt} & \overline{GJ} \end{bmatrix} \begin{Bmatrix} u_e' \\ w'' \\ v'' \\ \theta' \end{Bmatrix}$$

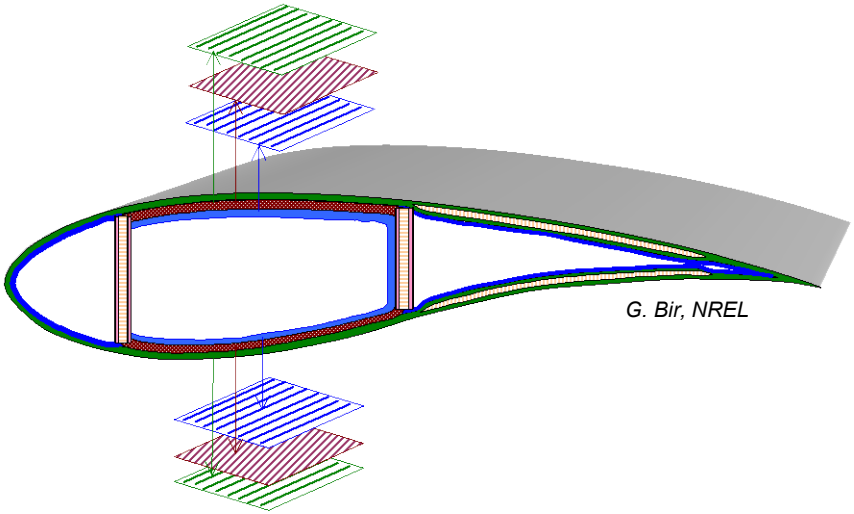

NuMAD (Developed by SNL)

- A GUI pre- & post-processor for **ANSYS**-based blade analysis:
  - Lay-up of composite laminas & webs
  - Enables one to create a 3D FEA model & perform structural analysis
  - "Beam property extraction" (**BPE**) feature to produce section properties for beam-type models
  - Load mapping for stress recovery
  - **Plot3D** output for CFD mesh
- Future opportunities – Industry requests

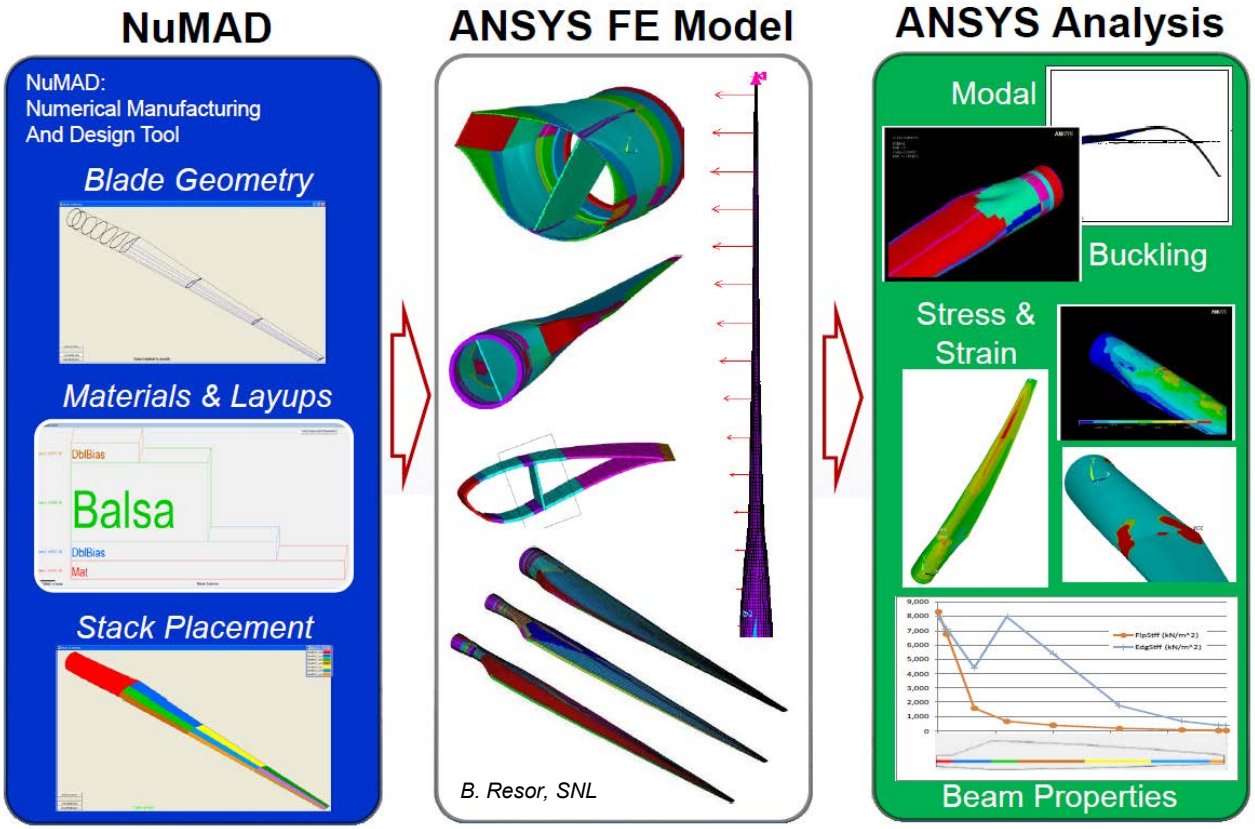

BModes

- Computes coupled mode shapes & frequencies of blades & towers:
  - Inputs are the boundary conditions & distributed isotropic beam properties
  - Considers axial-flap-lag-torsion coupling
  - Uses a 15-DOF FE specially developed to handle rotation-related terms
  - Boundary conditions include towers with flexible foundations or floating bases
  - Derive mode shapes for **FAST** using **ModeShapePolyFitting.xlsx**
- Current & planned work:
  - Replace with FE formulation in **FAST**'s **BeamDyn** module
- Future opportunities:
  - Add gravitational destiffening to tower model
  - Compute mode shapes about loaded deflection
  - Allow for anisotropic material (from **PreComp**, **NuMAD**, or **VABS**)
  - Allow for built-in curvature & sweep

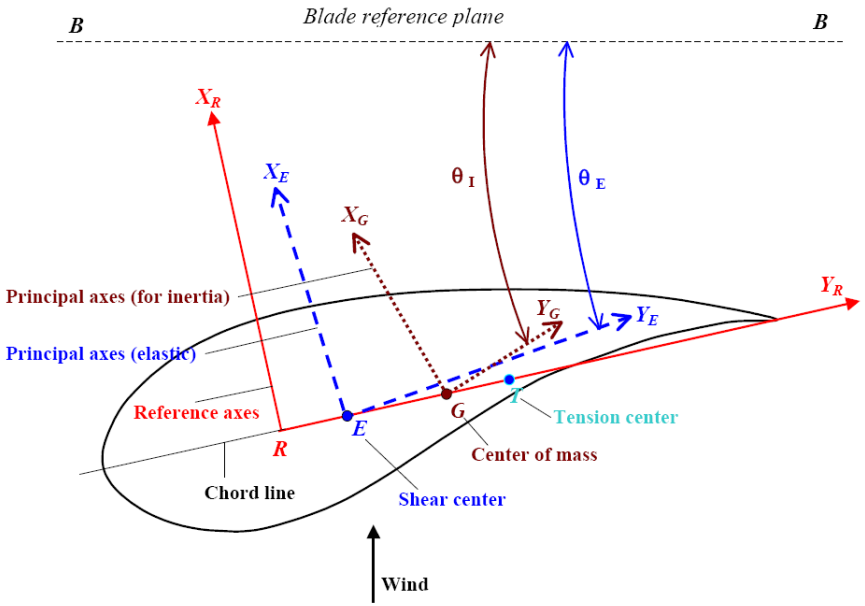

WT_Perf & HARP_Opt

- **WT_Perf** calculates steady-state rotor performance:
  - Inputs are rotor geometry, airfoil data, wind, pitch, & rotor speed
  - Uses BEM theory
- **HARP_Opt** optimizes rotor performance:
  - **MATLAB**-based wrapper of **WT_Perf**
  - Uses GA to design rotor geometry for optimal aerodynamic efficiency (AEP)
- Current & planned work:
  - Replace BEM with algorithm from **AeroDyn**
- Future opportunities:
  - Import **AirfoilPrep** features
  - Add algorithm for tuning airfoil data to match measured performance
  - Incorporate a vortex-wake model
  - Extend optimization algorithm to multi-disciplinary problems

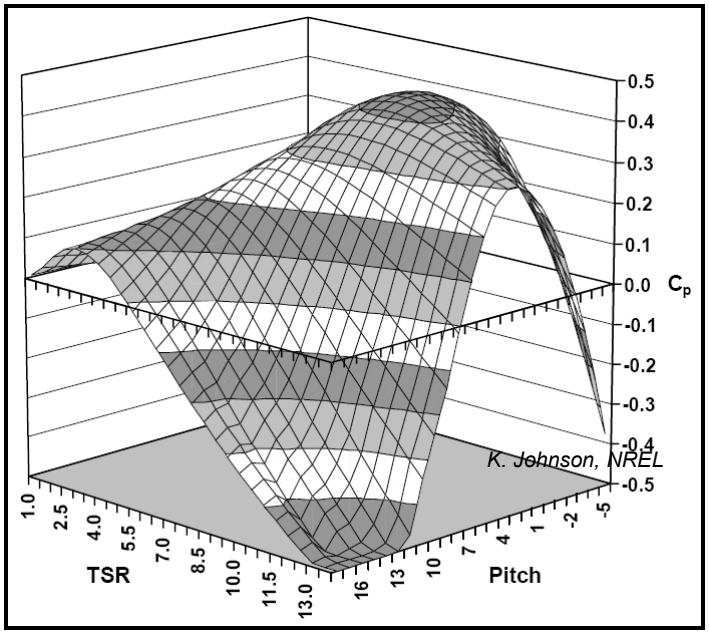

Power Coefficient of CART2

MSC.ADAMS, A2AD, & FAST-to-ADAMS

- Computes structural-dynamic & control-system responses as part of the aero-hydro-servo-elastic solution:
  - **ADAMS** is a commercial product from MSC Software
  - Uses a multi-body representation with virtually unlimited DOFs
  - Controls through subroutines or DLLs
  - Nonlinear time-domain solution for loads analysis
  - Linearization of nonrotating system
  - Coupled to **AeroDyn** & **HydroDyn** through **A2AD**
  - Datasets can be created by **FAST**
  - Bypasses some limitations of **FAST**
- Future opportunities:
  - Overhaul to the new modularization framework
  - Enable compatibility with the **ADAMS** C++ solver
  - Restructure **A2AD** for improved numerics
  - Improve modeling pre-curved & pre-swept blades
  - Replace rigid with flex bodies (imported from FEA)
  - Utilize linearization in a rotating frame
  - Model gearboxes in detail

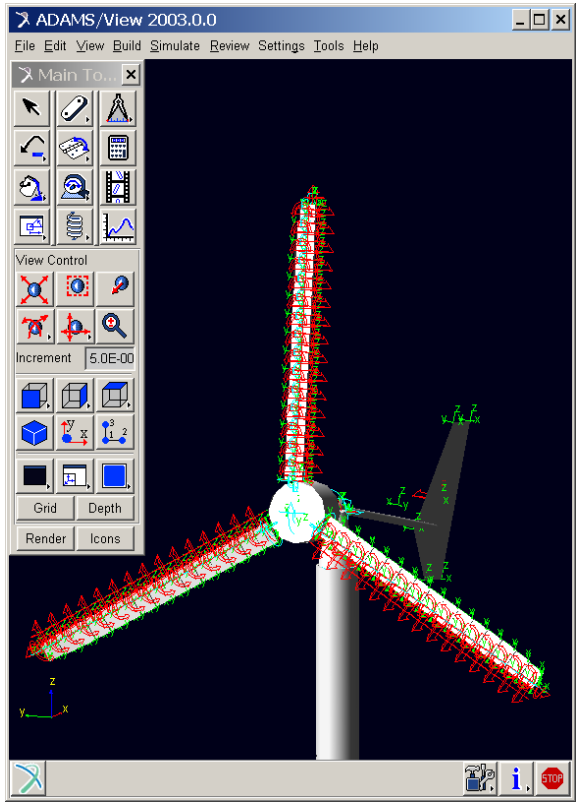

ADAMS** Model Made by **FAST

MCrunch, MExtremes, & MLife

- **MATLAB**-based postprocessors
- **MCrunch** for general data analysis:
  - Merges features from legacy codes (**Crunch**, **GPP**, **GenStats**, & **Fatigue**):
    - Scales, offsets, & calculated channels
    - Statistics
    - Probability density functions
    - Power spectral density
    - Extreme event tables
    - Rainflow counting, DELs, & lifetime damage
    - Plotting
  - Processes all data files together

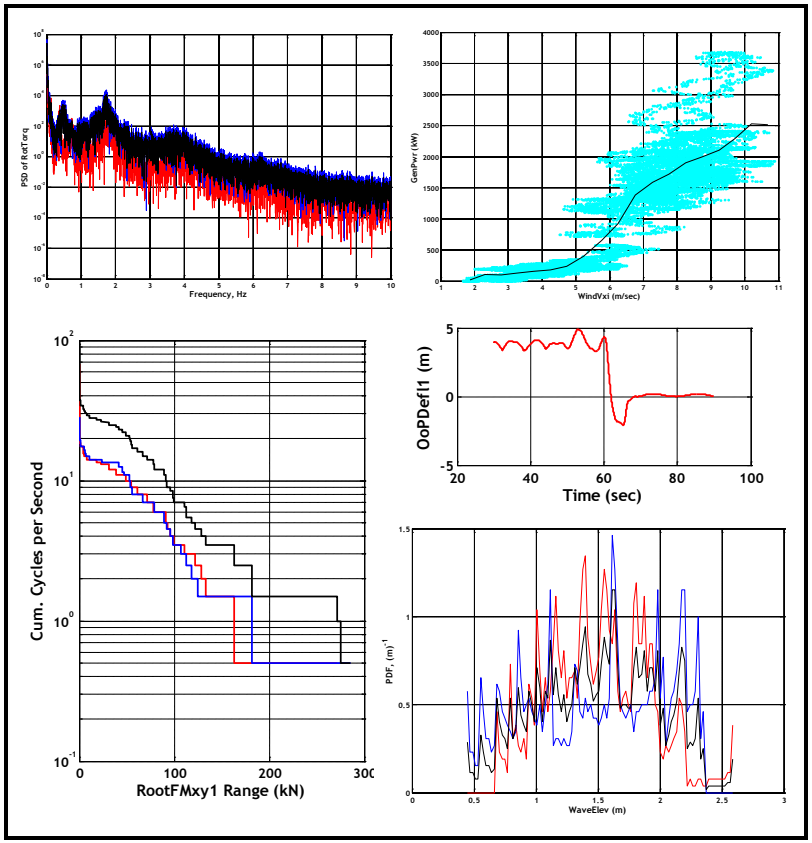

*Example Outputs from **MCrunch***

MCrunch, MExtremes, & MLife (cont)

- **MExtremes** for extreme-event tables:
  - Processes data files independently
  - Scales, offsets, PSFs, & calculated channels
  - Statistics
  - Peak finding
- **MLife** for fatigue-life analysis:
  - Processes data files independently
  - Scales, offsets, PSFs, & calculated channels
  - Statistics
  - Rainflow counting, DELs, & lifetime
- Current & planned work:
  - Develop consistency across tools & release beta versions
- Future opportunities:
  - Filtering, load roses, azimuth averages, statistical extrapolation, etc.

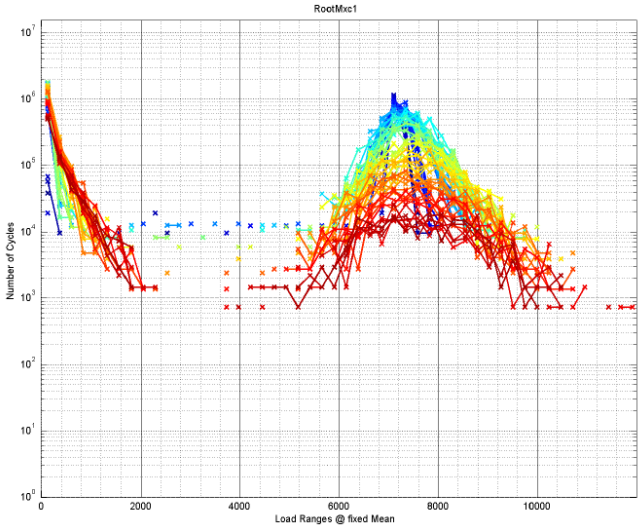

Lifetime Cycles of In-Plane Blade-Root Bending Moment Per Simulation

MBC3

- A **MATLAB**-based postprocessor for Multi-Blade-Coordinate transformation:
  - Accepts **FAST** linearization output as input
  - Transforms cumulative dynamics of spinning rotor blades into the nonrotating frame
  - Handles system, controls, & disturbance matrices for states & outputs
  - Applicable to controls design & stability analysis for 3-bladed rotors
- Future opportunities:
  - Extend formulation to more than 3 blades
  - Develop Floquet-based tools for 2 bladers
  - Establish stability guidelines for turbine designers

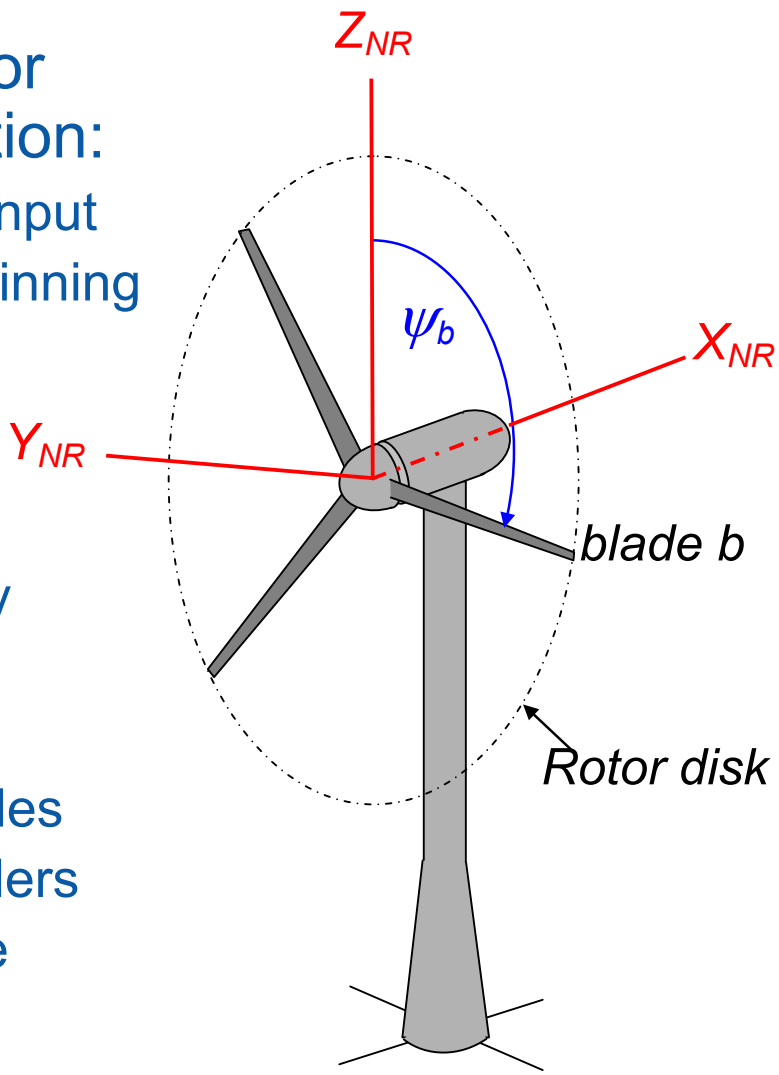

NWTC Subroutine Library

- Contains general-purpose routines for use by all CAE tools:
  - I/O, math, platform, & compiler-specific routines
  - Supports IVF for Windows & gfortran for Windows & Linux
  - Used by most of the NWTC CAE tools
  - Reduces development & maintenance time
- Recent work – Converted to be compatible with the new **FAST** v8 framework
- Current & planned work - Develop new libraries for numerical methods:
  - Mapping between spatial meshes
  - Root finders (Jacobian-based & Jacobian-free)
  - ODE & DAE time-integrators
- Future opportunities – Develop new numerical methods:
  - FFT routines
  - Linear equation solvers & matrix inversion
  - Eigensolvers
  - Sparse solvers

Automation Scripts

- Three scripts previously available on the web site:
  - **RunIEC**: Runs **IECWind**, **FAST**, & **Crunch** for IEC discrete load cases
  - **RunNTM**: Runs **TurbSim**, **FAST**, & **Crunch** for multiple turbulence cases
  - **CondorNTM**: Same as **RunNTM**, but uses Condor
  - All written in Perl; must know a little Perl to modify
  - No longer supported
- Have an in-house script also called **RunIEC**:
  - Combined features from all three of the above scripts
  - Tailored to IEC-style load cases
  - Runs jobs serially or on HPC (multi-processor server)
  - Currently requires significant customization to use
  - Includes customizable load cases (parametric or combined-case analyses)
- Current & planned work – Make in-house **RunIEC** user friendly, write manual, & distribute

NREL's RedMesa HPC System

A Final Thought

Paraphrasing George E. P. Box

"All models are wrong, but some provide useful insight"

NREL
NATIONAL RENEWABLE ENERGY LABORATORY

Questions?

Jason Jonkman, Ph.D.
+1 (303) 384 – 7026
jason.jonkman@nrel.gov