NREL
NATIONAL RENEWABLE ENERGY LABORATORY

Overview of the FAST Servo-Elastic Module

NREL Wind Turbine Modeling Workshop

April 17, 2013

JEMA – Tokyo, Japan

Jason Jonkman, Ph.D.
Senior Engineer, NREL

NREL is a national laboratory of the U.S. Department of Energy, Office of Energy Efficiency and Renewable Energy, operated by the Alliance for Sustainable Energy, LLC.

Outline

- Overview:
  - FAST – What Is It?
  - History
  - Turbine Configurations
  - Degrees of Freedom
  - Basic Theory
  - Turbine Parameterizations
  - Modes of Operation
- Simulation:
  - Loads Analysis
  - Inputs & Outputs (I/O)
  - Control Options
  - Interfacing Controllers
- Sample Models Provided with the Archive
- Recent Work
- Current & Planned Work
- Future Opportunities

Overview

FAST – What Is It?

- Structural-dynamic model for horizontal-axis wind turbines:
  - Used to stand for **F**atigue, **A**erodynamics, **S**tructures, & **T**urbulence
  - Now just "**FAST**"
  - Coupled to **AeroDyn**, **HydroDyn**, & controller for aero-hydro-servo-elastic simulation
  - Evaluated by Germanischer Lloyd WindEnergie
- Latest version:
  - v7.02.00d-bjj (February 2013)
  - Newer in progress
- User's Guide:
  - Jonkman & Buhl (2005)
  - Addendum (2013)
- Theory Manual (unofficial):
  - Jonkman (2005)

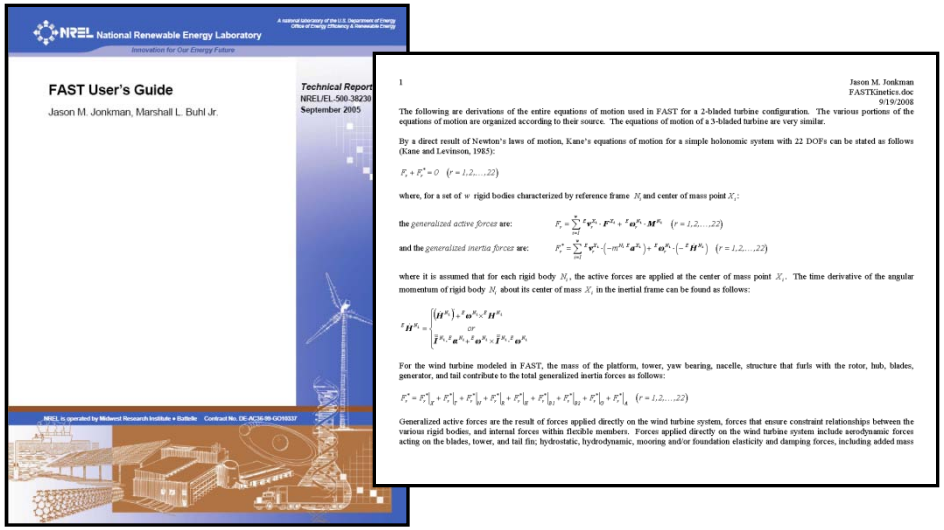

Overview

History

FAST2, FAST3 (pre-1996)

- Developer: B. Wilson, OSU
- Different code for 2- & 3-blades
- Built-in aerodynamics

FAST_AD2, FAST_AD3 (1996)

- Developer: A. Wright, NREL
- Different code for 2- & 3-blades
- **AeroDyn** aerodynamics

FAST_AD v1 – v3 (1997-2002)

- Developers: N. Weaver, M. Buhl, et al., NREL
- Single code for 2- & 3-blades
- **AeroDyn** aerodynamics

FAST v4 – v7 (2002-present)

- Developer: J. Jonkman, NREL
- Single code for 2- & 3-blades
- Rederived & implemented EoM
- New DOFs (furling, platform)
- **AeroDyn** aerodynamics
- **HydroDyn** hydrodynamics
- Linearization
- FAST-to-ADAMS preprocessor

Overview

Turbine Configurations

- Horizontal-axis (HAWT)
- 2- or 3-bladed rotor
- Upwind or downwind rotor
- Rigid or teetering hub
- Conventional configuration or inclusion of rotor- &/or tail-furling
- Land- or sea-based
- Offshore monopiles or floating
- Rigid or flexible foundation

Overview

Degrees of Freedom

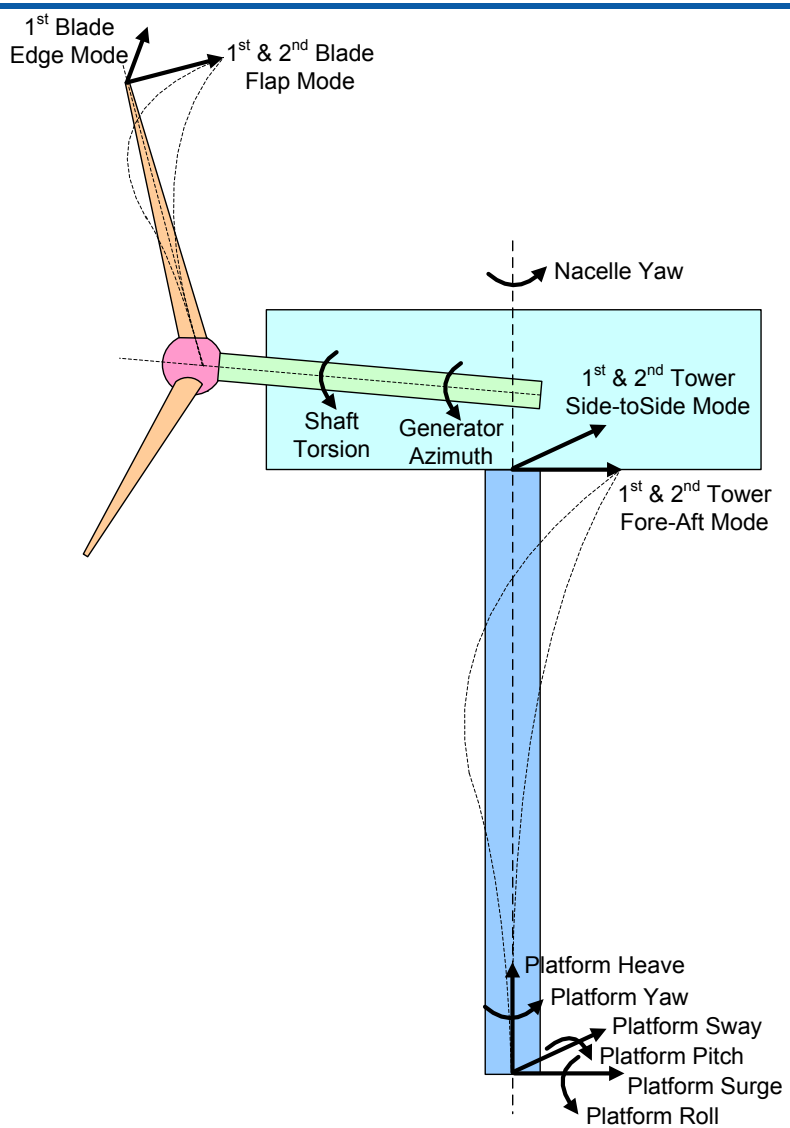

Blades:	2 flap modes per blade 1 edge mode per blade
Tower:	2 fore-aft modes 2 side-to-side modes
Drivetrain:	1 generator azimuth 1 shaft torsion
Nacelle:	1 yaw bearing
Teeter:	1 rotor teeter hinge with optional δ_3 (2-blader only)
Furl:	1 rotor-furl hinge of *arbitrary orientation & location* between the nacelle & rotor 1 tail-furl hinge of *arbitrary orientation & location* between the nacelle & tail
Platform:	3 translation (surge, sway, heave) 3 rotation (roll, pitch, yaw)
Total:	24 DOFs available for 3-blader 22 DOFs available for 2-blader

Overview

Basic Theory

$$F = ma$$

(any questions? ☺)

Overview

Basic Theory (cont)

- Combined multi-body & modal-dynamics formulation:
  - Modal: blades, tower
  - Multi-body: platform, nacelle, generator, gears, hub, tail
- Utilizes relative DOFs:
  - No constraint equations
  - ODEs instead of DAEs
- *Nonlinear* equations of motion (EoMs) are derived & implemented using Kane's Method (not an energy method)
- EoM form:

$$M\left(\underline{q},\underline{u},t\right)\underline{\ddot{q}}+\underline{f}\left(\underline{q},\underline{\dot{q}},\underline{u},\underline{u_d},t\right)=\underline{0}$$

$$\underline{OutData}=\underline{Y}\left(\underline{q},\underline{\dot{q}},\underline{u},\underline{u_d},t\right)=Y_r\left(\underline{q},\underline{u},t\right)\underline{\ddot{q}}+\underline{Y_t}\left(\underline{q},\underline{\dot{q}},\underline{u},\underline{u_d},t\right)$$

- Time integration using the 4th-order Adams-Bashforth-Adams-Moulton (ABM4) predictor-corrector (PC) fixed-step-size integration scheme:
  - Initialized using 4th-order Runge-Kutta (RK4) explicit scheme

Overview

Basic Theory (cont)

- Blade & tower modeling assumptions:
  - Bernoulli-Euler beams under bending:
    - No axial or torsional DOFs
    - No shear deformation
  - Straight beams with isotropic material & no mass or elastic offsets:
    - Blade pretwist induces flap & edge coupling
  - Motions consider small to moderate deflections:
    - Modal superposition of lowest modes:
      - Mode shapes specified as polynomial coefficients
      - Mode shapes not calculated internally:
        - » Found from e.g. **BModes** or modal test
      - Shapes should represent modes, but **FAST** doesn't require orthogonality:
        - » No diagonalization employed (Rayleigh-Ritz method)
    - Bending assumes small strains: $\theta \approx \frac{\partial u}{\partial h} \quad \kappa \approx \frac{\partial^2 u}{\partial h^2}$
    - Employs small angle approximations with nonlinear corrections for coordinate system orthogonality
    - Otherwise, all terms include full nonlinearity:
      - Motions include radial shortening terms (geometric nonlinearity)
      - Inertial loads include nonlinear centrifugal, Coriolis, & gyroscopic terms

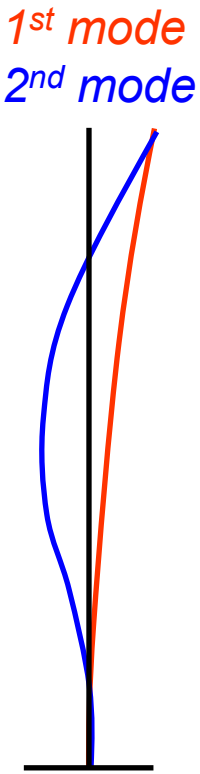

Modal Representation

Overview

Basic Theory (cont)

- Support platform pitch, roll, & yaw motions employ small angle approximations with nonlinear correction for orthogonality
- All other DOFs may exhibit large motions w/o loss of accuracy

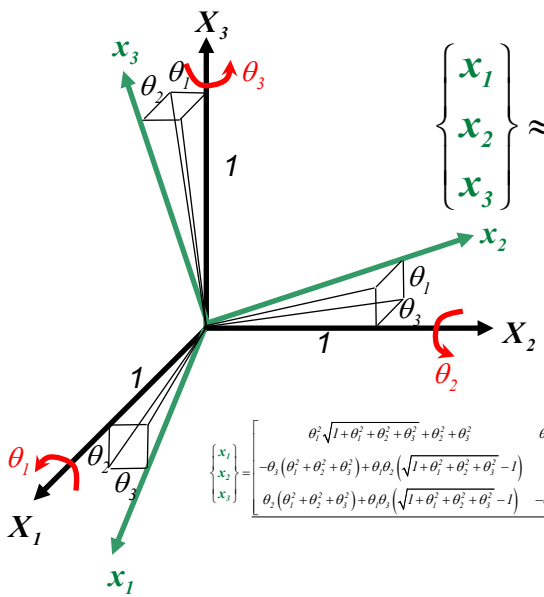

$$\begin{Bmatrix} x_1 \\ x_2 \\ x_3 \end{Bmatrix} \approx \begin{bmatrix} 1 & \theta_3 & -\theta_2 \\ -\theta_3 & 1 & \theta_1 \\ \theta_2 & -\theta_1 & 1 \end{bmatrix} \begin{Bmatrix} X_1 \\ X_2 \\ X_3 \end{Bmatrix}$$

$$\begin{Bmatrix} x_1 \\ x_2 \\ x_3 \end{Bmatrix} = \frac{\begin{bmatrix} \theta_1^2\sqrt{1+\theta_1^2+\theta_2^2+\theta_3^2}+\theta_2^2+\theta_3^2 & \theta_3\left(\theta_1^2+\theta_2^2+\theta_3^2\right)+\theta_1\theta_2\left(\sqrt{1+\theta_1^2+\theta_2^2+\theta_3^2}-1\right) & -\theta_2\left(\theta_1^2+\theta_2^2+\theta_3^2\right)+\theta_1\theta_3\left(\sqrt{1+\theta_1^2+\theta_2^2+\theta_3^2}-1\right) \\ -\theta_3\left(\theta_1^2+\theta_2^2+\theta_3^2\right)+\theta_1\theta_2\left(\sqrt{1+\theta_1^2+\theta_2^2+\theta_3^2}-1\right) & \theta_2^2\sqrt{1+\theta_1^2+\theta_2^2+\theta_3^2}+\theta_3^2 & \theta_1\left(\theta_1^2+\theta_2^2+\theta_3^2\right)+\theta_2\theta_3\left(\sqrt{1+\theta_1^2+\theta_2^2+\theta_3^2}-1\right) \\ \theta_2\left(\theta_1^2+\theta_2^2+\theta_3^2\right)+\theta_1\theta_3\left(\sqrt{1+\theta_1^2+\theta_2^2+\theta_3^2}-1\right) & -\theta_1\left(\theta_1^2+\theta_2^2+\theta_3^2\right)+\theta_2\theta_3\left(\sqrt{1+\theta_1^2+\theta_2^2+\theta_3^2}-1\right) & \theta_3^2+\theta_2^2+\theta_3^2\sqrt{1+\theta_1^2+\theta_2^2+\theta_3^2} \end{bmatrix}}{\left(\theta_1^2+\theta_2^2+\theta_3^2\right)\sqrt{1+\theta_1^2+\theta_2^2+\theta_3^2}} \begin{Bmatrix} X_1 \\ X_2 \\ X_3 \end{Bmatrix}$$

Correction for Orthogonality

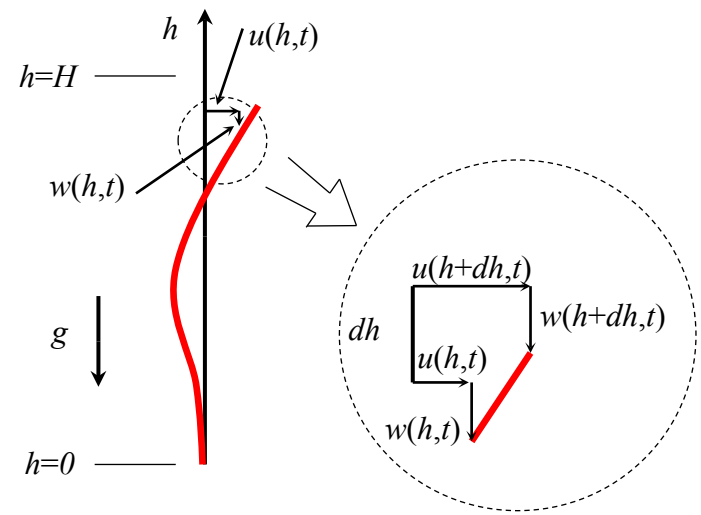

$$w(h,t) = \frac{1}{2}\int_0^h \left[\frac{\partial u(h',t)}{\partial h'}\right]^2 dh'$$

Radial Shortening Effect

Overview

Turbine Parameterization – Upwind, 3-Blader

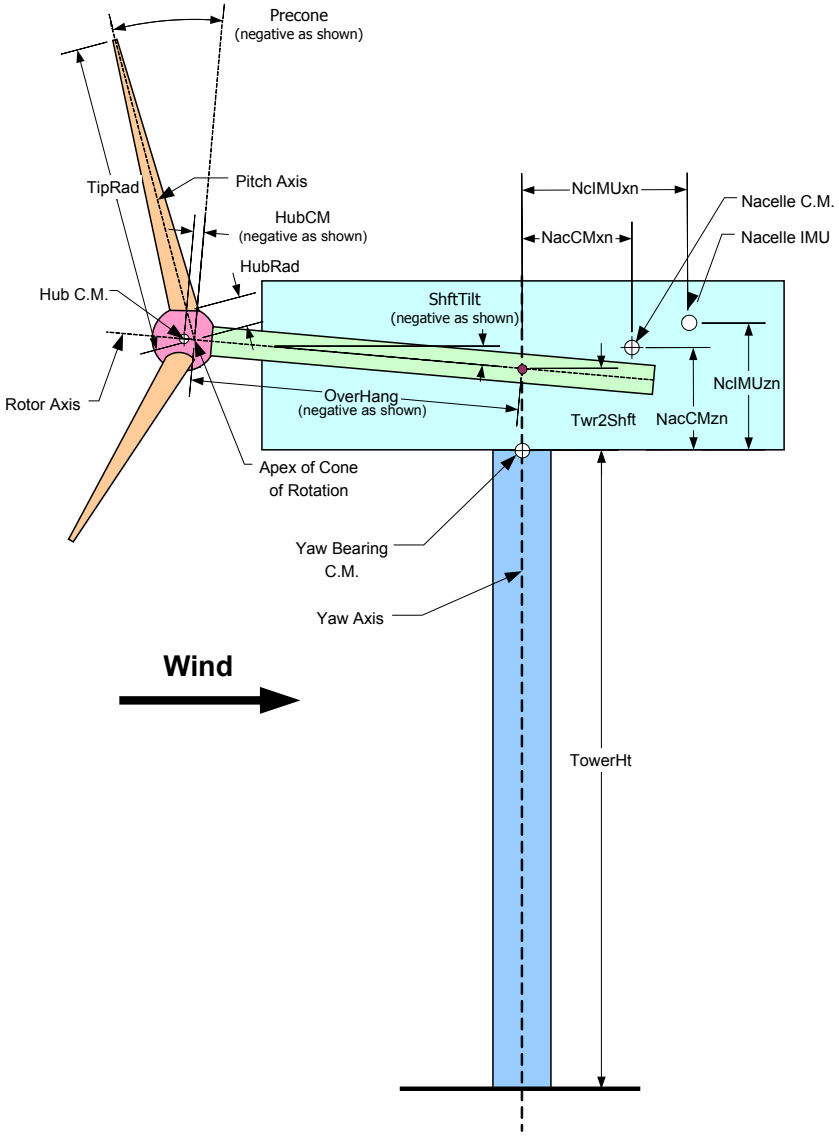

Overview

Turbine Parameterization – Downwind, 2-Blader

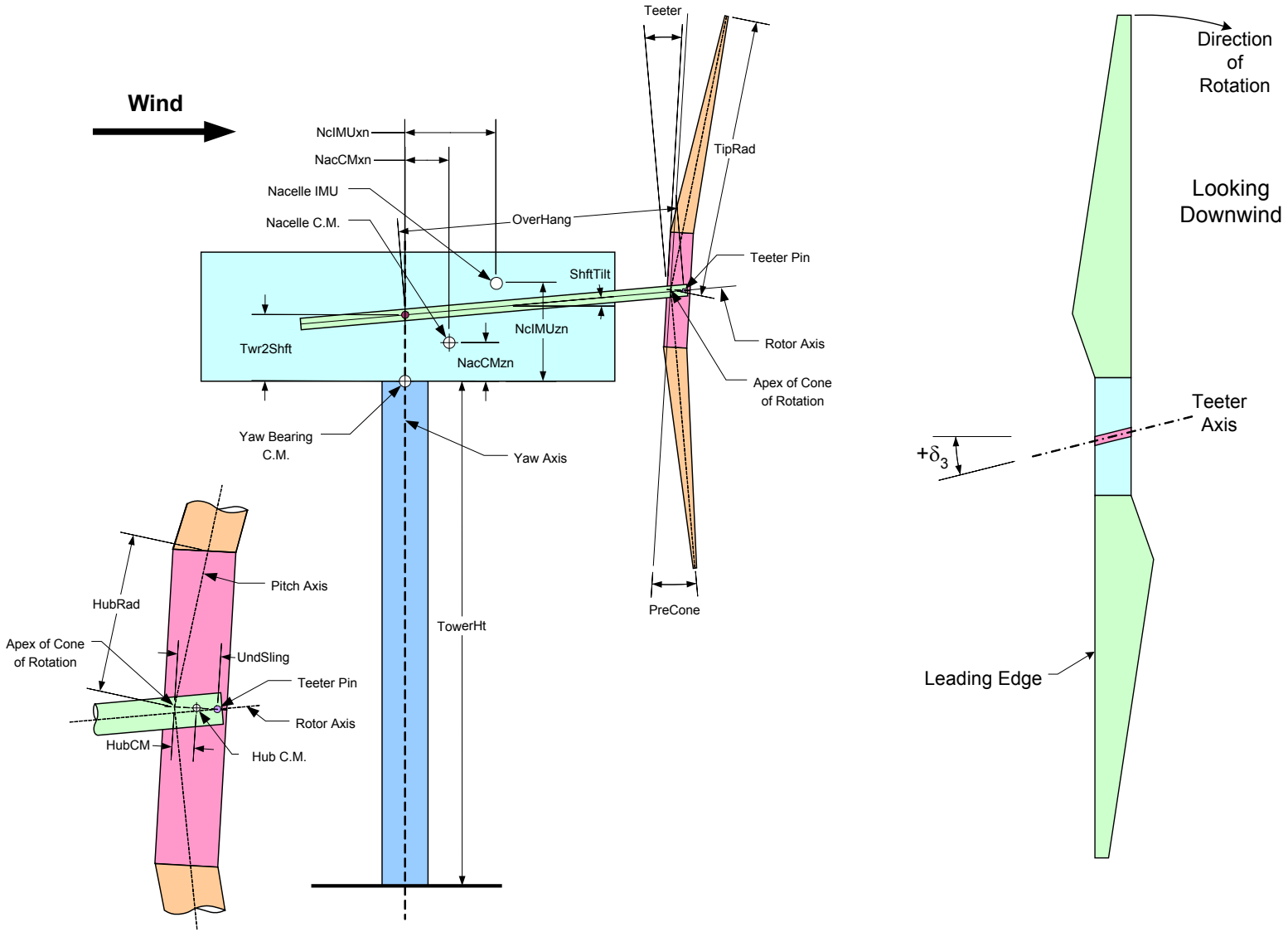

Overview

Turbine Parameterization – Furling DOFs

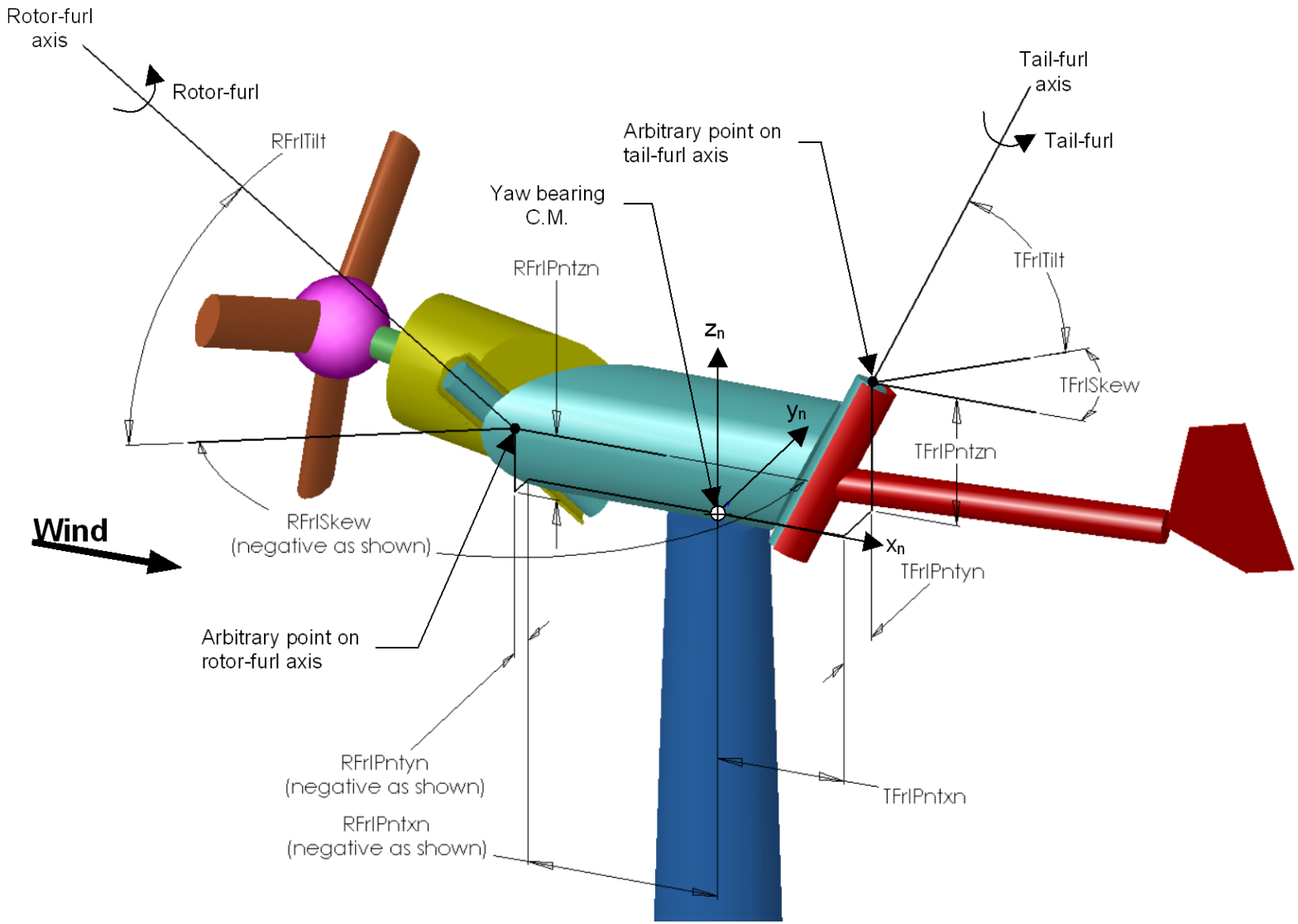

Overview

Turbine Parameterization – Support Platform

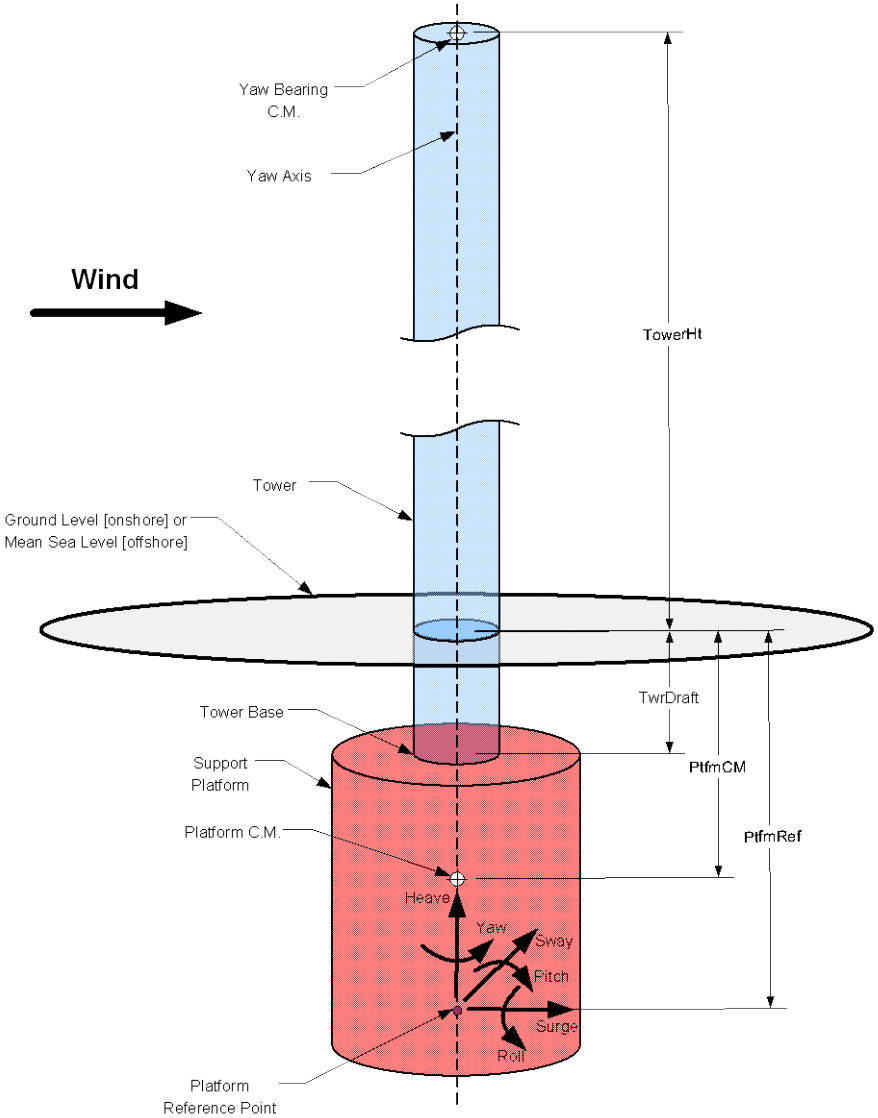

Overview

Modes of Operation

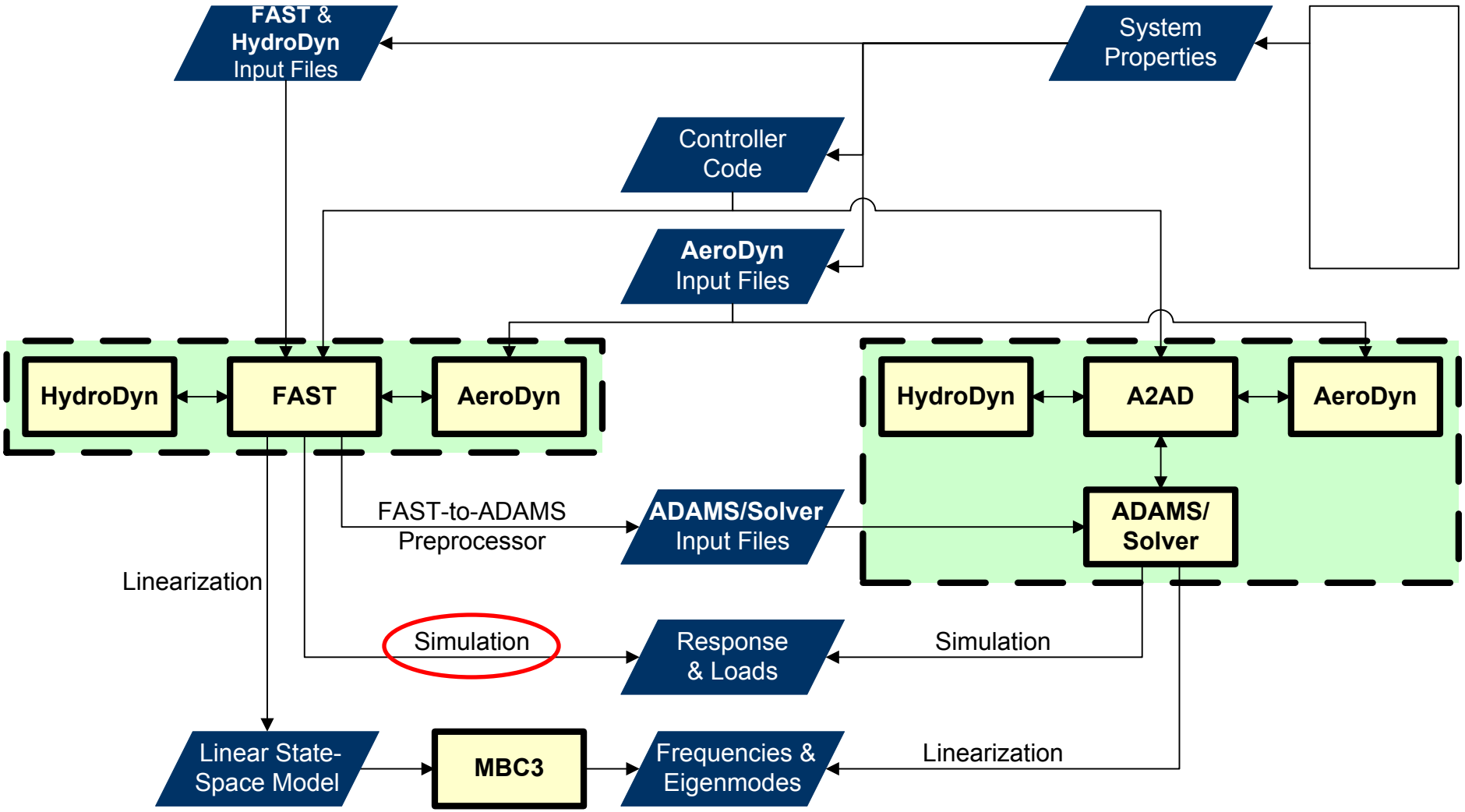

Simulation

Loads Analysis

- Nonlinear time-domain solution for loads analysis
- Run simulation within command prompt (.exe), within **MATLAB/Simulink** (.mexw32), or within **LabVIEW** (.dll)
- Design situations & conditions:
  - Turbulent & deterministic winds
  - Regular & irregular waves
  - Earthquake excitation
  - Power production with control
  - Start-up & shut-down maneuvers
  - Idling & parked conditions
  - Control system faults

Design Situation	DLC	Wind Condition	Wave Condition	Directionality	Other Conditions	Type of Analysis
Power production	1.x					
Power production plus occurrence of fault	2.x					
Start up	3.x					
Normal shut down	4.x					
Emergency shut down	5.x					
Parked	6.x					
Parked with fault	7.x					
Transport, assembly, and maintenance	8.x					

Load Case Matrix

Simulation

Inputs & Outputs (I/O)

- IEC-style coordinate systems for I/O
- Input parameters:
  - Simulation control:
    - Total time, time step
  - Feature flags
  - Initial conditions
  - Turbine configuration:
    - Geometry
  - Mass/inertia
  - Distributed blade/tower mass/stiffness
  - Blade/tower mode shapes
  - Control settings
  - Teeter, yaw, & furl springs/dampers
  - Output parameter selection
- Output parameters:
  - Motions:
    - Displacements
    - Velocities
    - Accelerations
    - Translational & rotational
    - Internal DOFs
  - Loads:
    - Shear forces
    - Axial forces
    - Bending moments
    - Torsion moments
  - Performance:
    - Wind
    - Power
    - Control settings

Simulation

Control Options

- Active control:
  - Blade pitch:
    - Collective or independent
    - To feather or stall
    - Command the angle
    - No actuator dynamics
    - Sample PID model included
  - Nacelle yaw:
    - Command the angle &/or rate
    - Optional 2nd-order actuator dynamics
  - Generator torque:
    - Fixed (with or without slip) or variable speed
    - Command the torque
    - Indirect electrical power
    - Default models built in
    - Sample table look-up model included
  - High-speed shaft brake:
    - Command the deployment
  - Blade tip brake:
    - Command the deployment
- Passive control:
  - Aerodynamic stall
  - Rotor teeter:
    - Optional damping & soft & hard stops
  - Nacelle yaw:
    - Free or restrained
  - Rotor furl:
    - Optional independent up- & down- springs & dampers
  - Tail furl:
    - Optional independent up- & down- springs & dampers

Simulation

Control Options – Default Torque Models

Simple Induction Generator

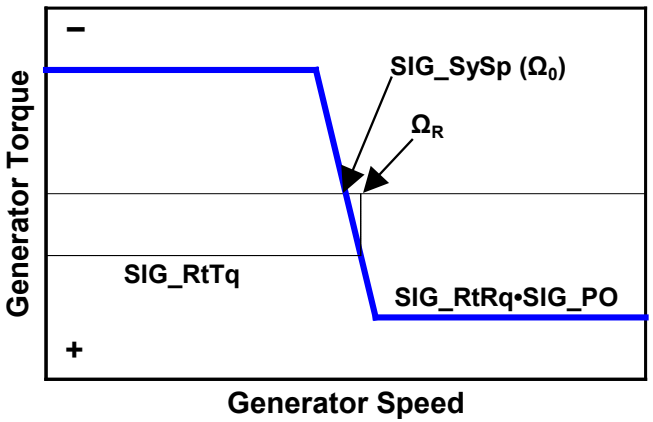

Thevenin-Equivalent Circuit Generator

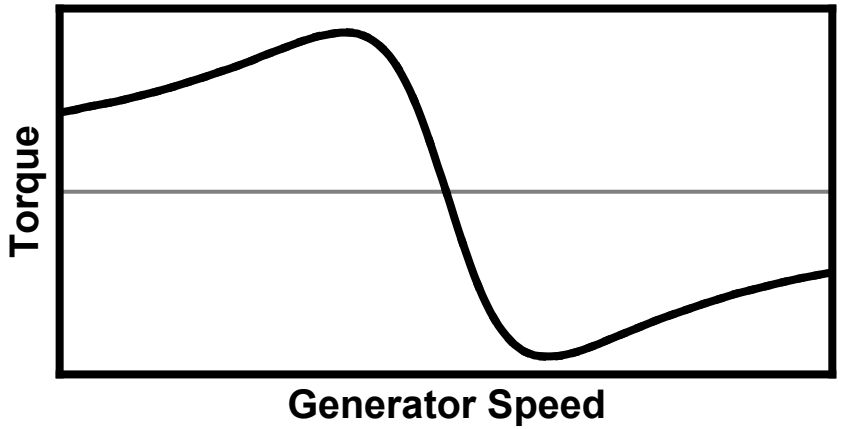

Simple Variable-Speed Controller

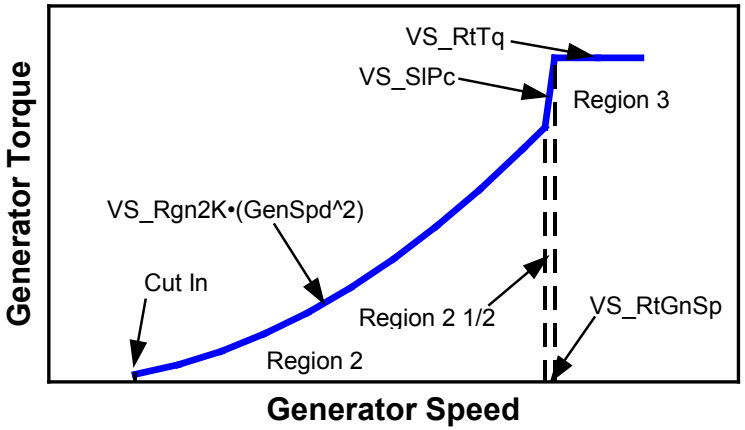

Simulation

Interfacing Active Controllers – 5 Options

- Select from one of the built-in routines
- Fortran subroutine:
  - Separate routines for each controller (i.e.: separate routines for blade pitch, generator torque, nacelle yaw, & brake)
  - Sample routines provided with **FAST** archive
  - Requires recompile with each change to controller
- **GH Bladed**-style dynamic link library (DLL):
  - DLL interface routines included with **FAST** archive
  - Requires recompile of **FAST** (with interface routines) only once
  - DLL compiled separately from **FAST**:
    - Mixed languages possible – Can be Fortran, C++, etc.
  - DLL is a master controller (i.e.: Pitch, torque, yaw, & brake controlled with same DLL)
- **MATLAB/Simulink**:
  - **FAST** implemented as S-Function block (.mexw32)
  - Controls implemented in block-diagram form
- **LabVIEW**:
  - **FAST** implemented as DLL callable by **LabVIEW**
  - Hardware-in-the-loop (HIL) possible

Simulation

Interfacing Controllers – MATLAB/Simulink

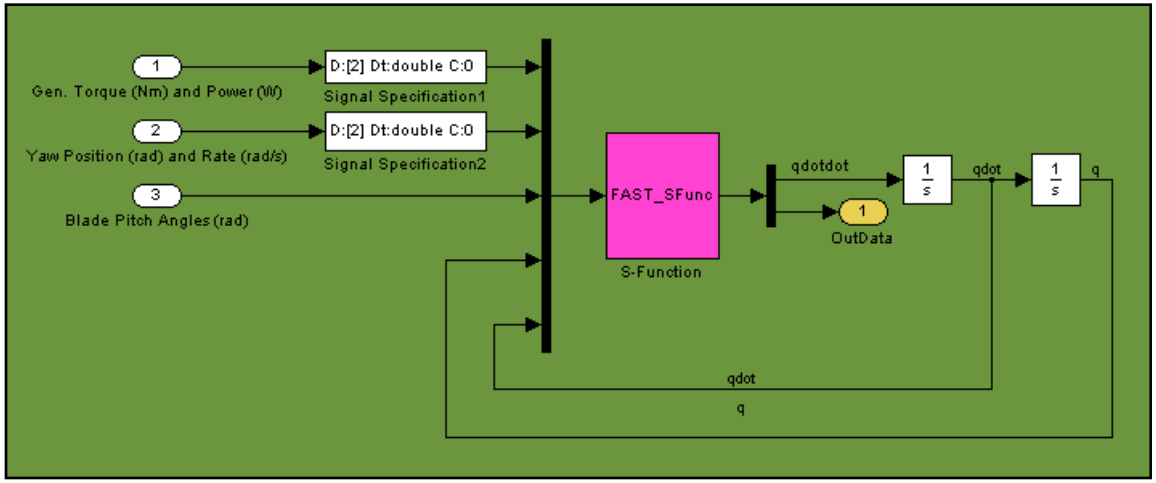

FAST *Wind Turbine Block*

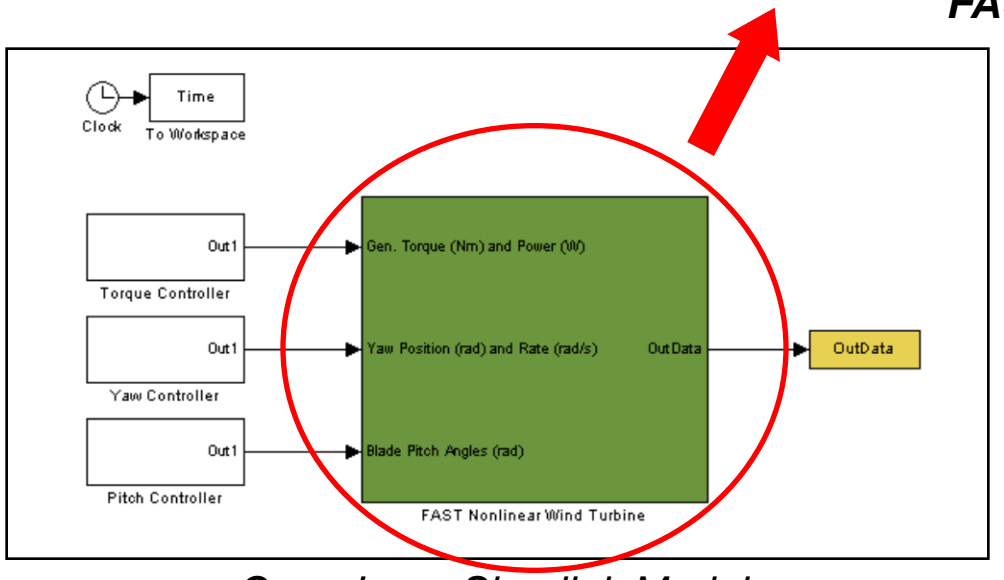

Open Loop Simulink Model

Sample Models Provided with the Archive

Test Name	Turbine Name	No. Blades (-)	Rotor Diameter (m)	Rated Power (kW)	Test Description
Test01	AWT-27CR2	2	27	175	Flexible, fixed yaw error, steady wind
Test02	AWT-27CR2	2	27	175	Flexible, start-up, HSS brake shut-down, steady wind
Test03	AWT-27CR2	2	27	175	Flexible, free yaw, steady wind
Test04	AWT-27CR2	2	27	175	Flexible, free yaw, turbulence
Test05	AWT-27CR2	2	27	175	Flexible, generator start-up, tip-brake shutdown, steady wind
Test06	AOC-15/50	3	15	50	Flexible, generator start-up, tip-brake shutdown, steady wind
Test07	AOC-15/50	3	15	50	Flexible, free yaw, turbulence
Test08	AOC-15/50	3	15	50	Flexible, fixed yaw error, steady wind
Test09	UAE VI downwind	2	10	20	Flexible, yaw ramp, steady wind
Test10	UAE VI upwind	2	10	20	Rigid, power curve, ramp wind
Test11	WP 1.5 MW	3	70	1500	Flexible, variable speed & pitch control, pitch failure, turbulence
Test12	WP 1.5 MW	3	70	1500	Flexible, variable speed & pitch control, ECD event
Test13	WP 1.5 MW	3	70	1500	Flexible, variable speed & pitch control, turbulence
Test14	WP 1.5 MW	3	70	1500	Flexible, stationary linearization, vacuum
Test15	SWRT	3	5.8	10	Flexible, variable speed control, free yaw, tail-furl, EOG01 event
Test16	SWRT	3	5.8	10	Flexible, variable speed control, free yaw, tail-furl, EDC01 event
Test17	SWRT	3	5.8	10	Flexible, variable speed control, free yaw, tail-furl, turbulence

- Others available (CART2, CART3, NREL 5-MW Baseline)

Recent Work

- Changes in v7.02.00d-bjj:
  - Added an optional binary output format (smaller size)
  - Introduced the **LabVIEW** interface
  - Supplied a "Compiling" folder supporting IVF for Windows & gfortran for Windows & Linux
  - Several minor changes & bug fixes
- Developed the new modularization framework:
  - Mathematical basis
  - Module source code template
  - Registry for automatic generation of general code
  - Programmer's Handbook
  - Simple examples
- Converted **FAST** to the new framework (v8):
  - Split into (each with own input files & source code):
    - **ServoDyn** module for the controller & electrical drive
    - **ElastoDyn** module for structural dynamics
    - **FAST** driver (glue) code

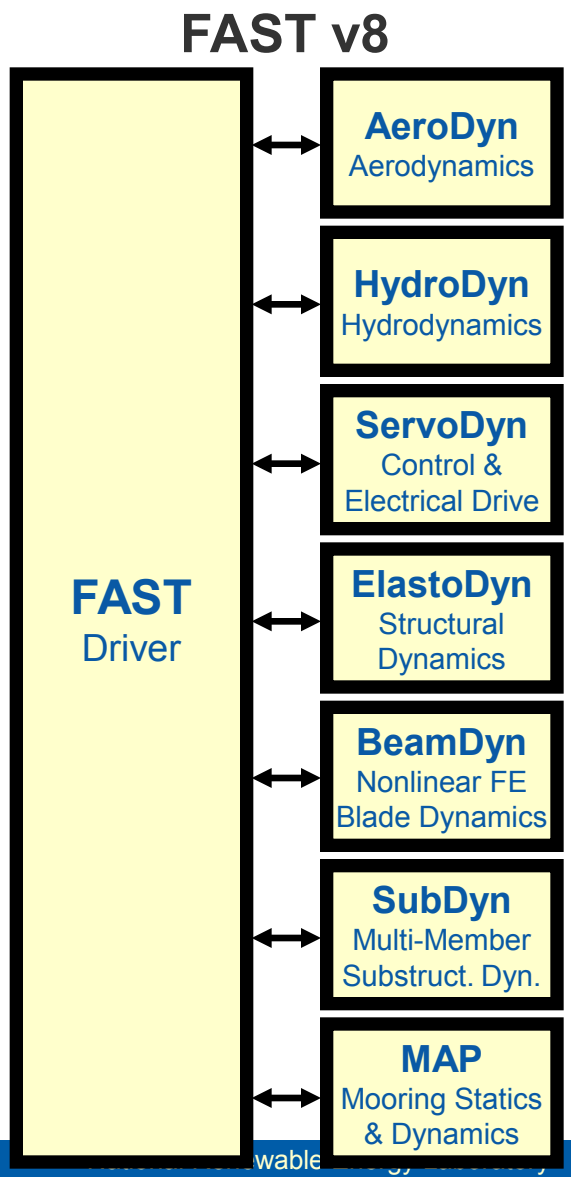

Current & Planned Work

- Further development of the new FAST modularization framework:
  - Develop mapping schemes between independent spatial meshes
  - Improve driver (glue) code for loose coupling (with mixed time-step PC approach)
  - Address current limitations of **FAST** v8 relative to v7
  - Develop driver (glue) code for tight coupling, including linearization
  - Publish the Programmer's Handbook

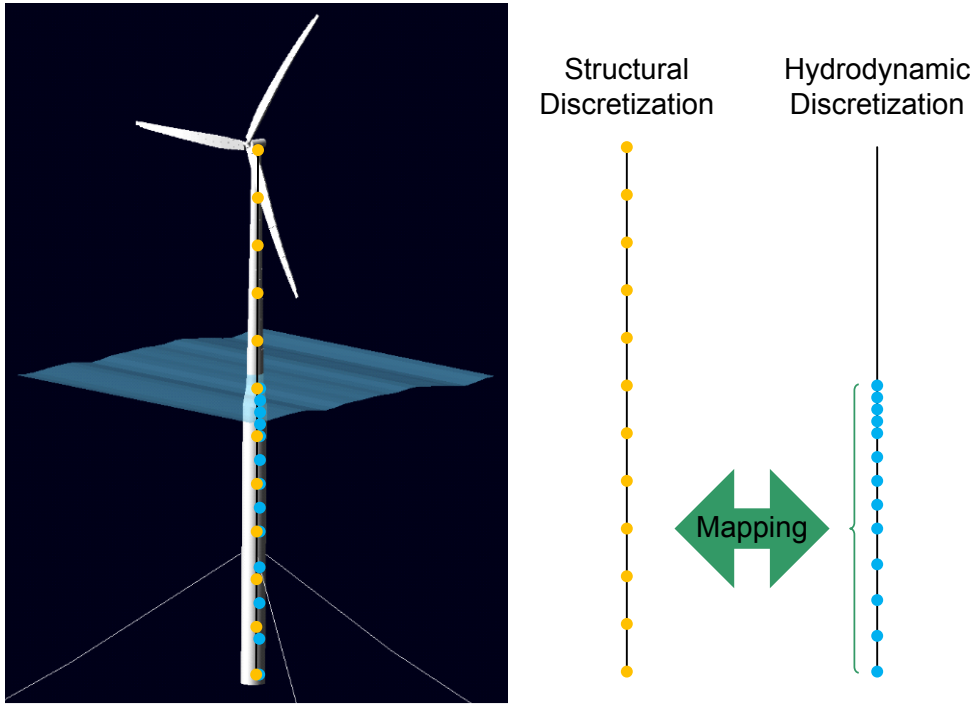

Mapping Independent Structural & Hydrodynamic Discretizations

Current & Planned Work (cont)

- Include more built-in electrical drive & control options in **ServoDyn** (e.g., generator Types 1-4, PID control)
- Incorporate higher-fidelity modeling of blades (**BeamDyn**):
  - Finite element (FE) & improved modal approaches
  - Based on Geometrically Exact Beam Theory (GEBT)
  - Full geometric nonlinearity
  - Introduce torsion, shear, & extensional DOFs
  - Allow for anisotropic material couplings (from **PreComp**, **NuMAD**, or **VABS**)
  - Add chordwise mass & elastic offsets
  - Allow for built-in curvature & sweep

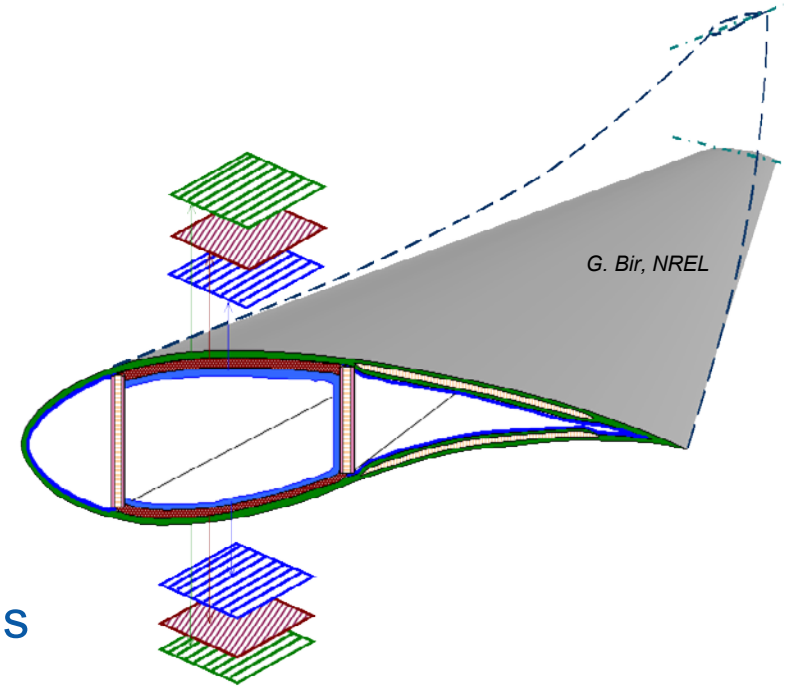

Blade Twist Induced By Anisotropic Layup

Future Opportunities

- Publish **ElastoDyn** Theory Manual
- Develop limited-functionality version (**FAST_EZ**) for ease of use by students in class
- Add animation capability
- Add blade-pitch DOFs & actuator models
- Add drivetrain dynamics & shaft deflection DOFs
- Add nacelle-based mass-damper DOFs (with UMass)
- Improve Coulomb friction models for yaw, teeter, & furling
- Develop a nonlinear beam FE with reduced DOFs per element
- Support SMART blade control
- Add measurement noise to control input signals
- Develop general capability for hinged & segmented blades
- Introduce built-in foundation models
- Develop interfaces to systems engineering tools (e.g. cost)
- Extend structural model to VAWTs

NREL
NATIONAL RENEWABLE ENERGY LABORATORY

Questions?

Jason Jonkman, Ph.D.
+1 (303) 384 – 7026
jason.jonkman@nrel.gov