Bottom Fixed Platform Dynamics Models Assessing Surface Ice Interaction for Transitional Depth Structures in the Great Lakes

Dale G. Karr
University of Michigan

NREL/DOE Workshop, AWEA OFFSHORE WINDPOWER 2012

Research Project Objective

- Develop an ice module for FAST.
  - Include 6 ice/structure models, based on ice failure mode and dynamic structural response.
  - Useful for a general ice/structure scenario, not restricted to conditions in the Great Lakes.

Ice Model 1

Quasi-static ice/structure interaction

Low ice speed, stiff structure
Loading frequency much smaller than that of the structure
Prescribed ice force: failure mode: creep, buckling

Ice Models

- Ice Model 2 – Dynamic ice/structure interaction
  - Intermediate ice speed, loading frequency comparable to the structure
  - Structure response coupled with ice force; failure modes are creep and crushing

- Ice Model 3 – Dynamic ice/structure interaction
  - Intermediate ice speed, loading frequency comparable to the structure
  - Structure response coupled with ice force; failure modes are creep and crushing

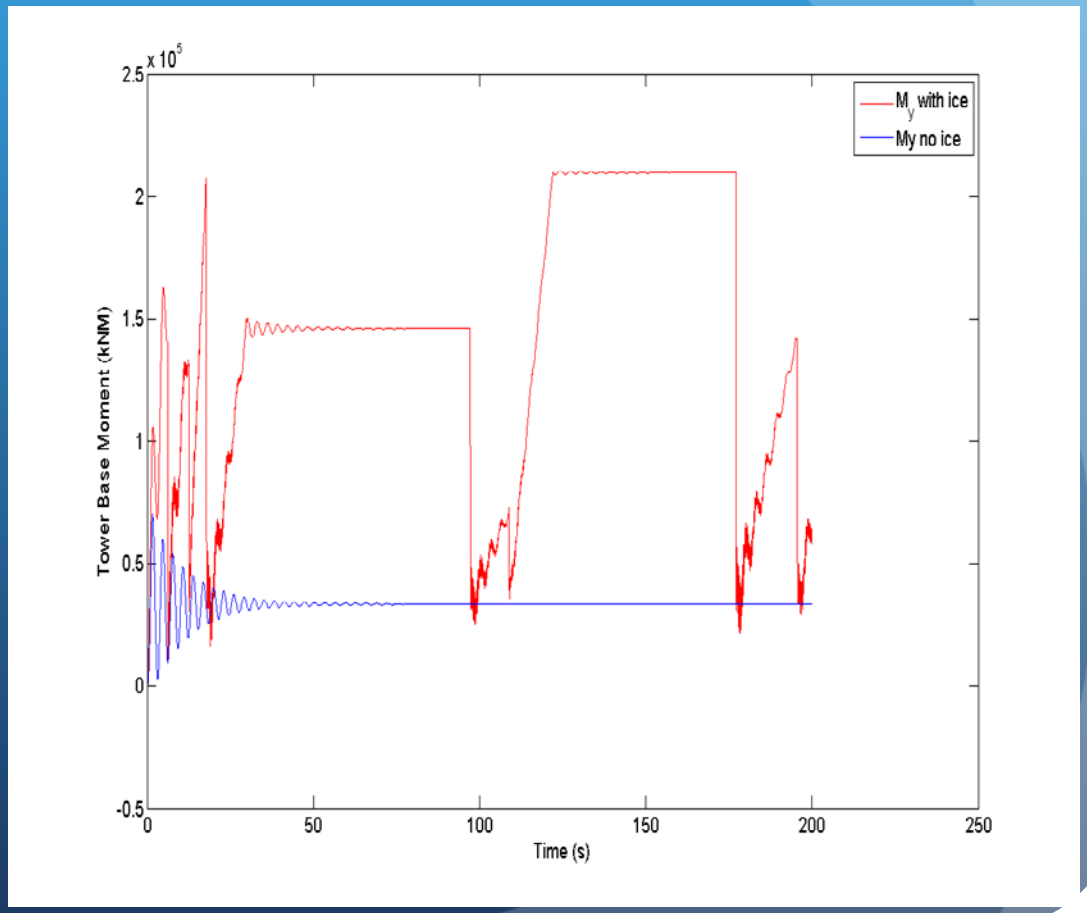

Ice Models

- Ice Model 4 – Multiple failure zone
  - Imperfect contact, small area of high-pressure contact
  - Local failure mode: crushing

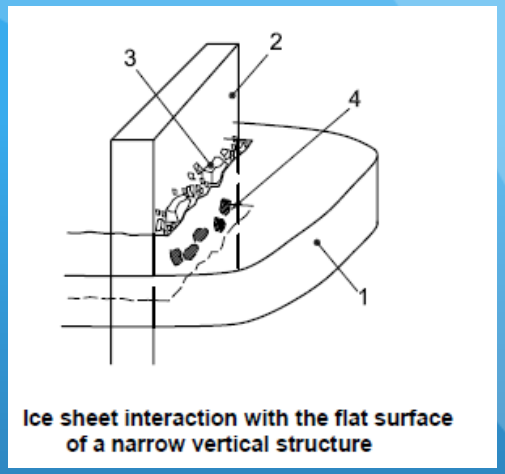

Ice sheet interaction with the flat surface of a narrow vertical structure

- Ice Model 5 – Ice bending
  - Sloping structure
  - Ice failure mode: tensile fracture,
  - lower tensile strength

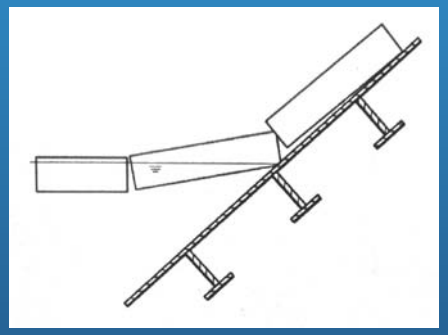

- Ice Model 6 – Ice floe impact
  - Sudden increase in forces
  - Transient, high amplitude vibrations
  - Limiting factor: splitting failure

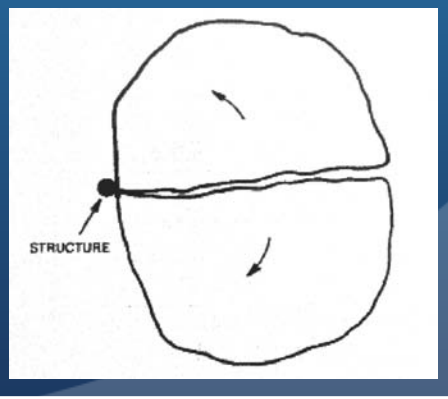

Acknowledgement:

US Department of Energy
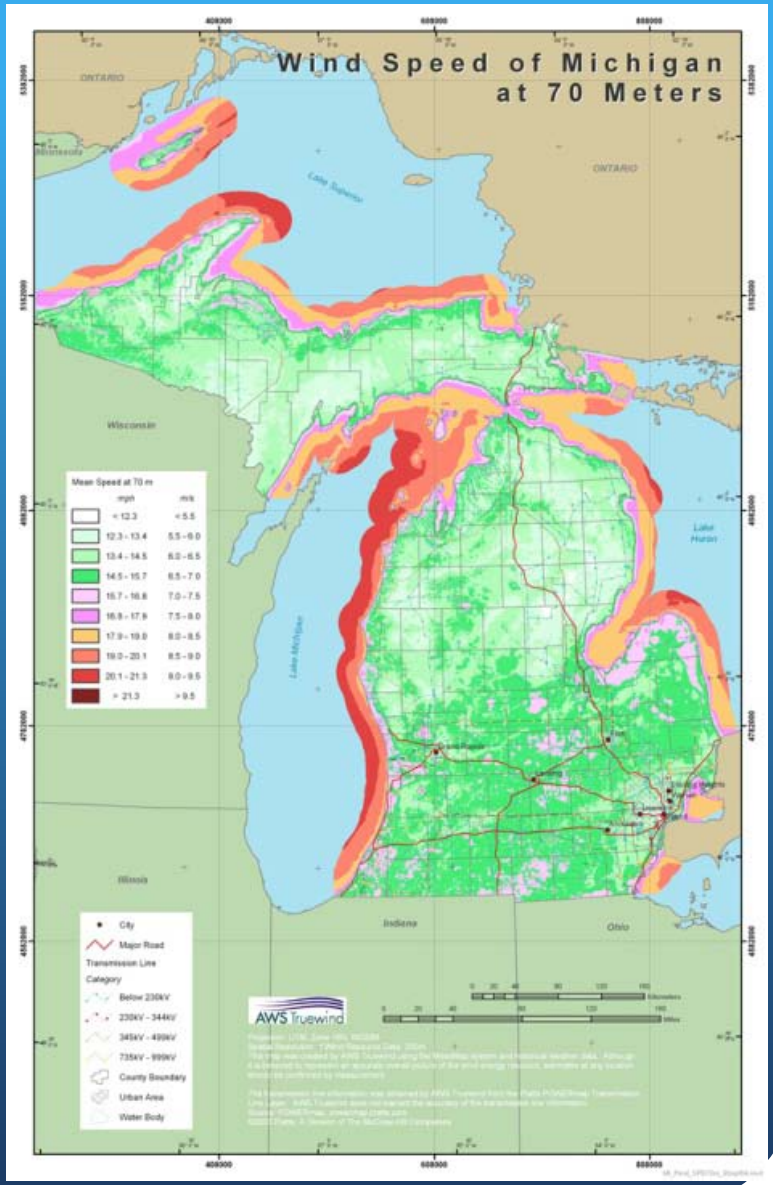
Wind Energy Program