Winergy Condition Diagnostics System
Enterprise-Wide Fleet Management
Roadmap to Advanced Condition Monitoring

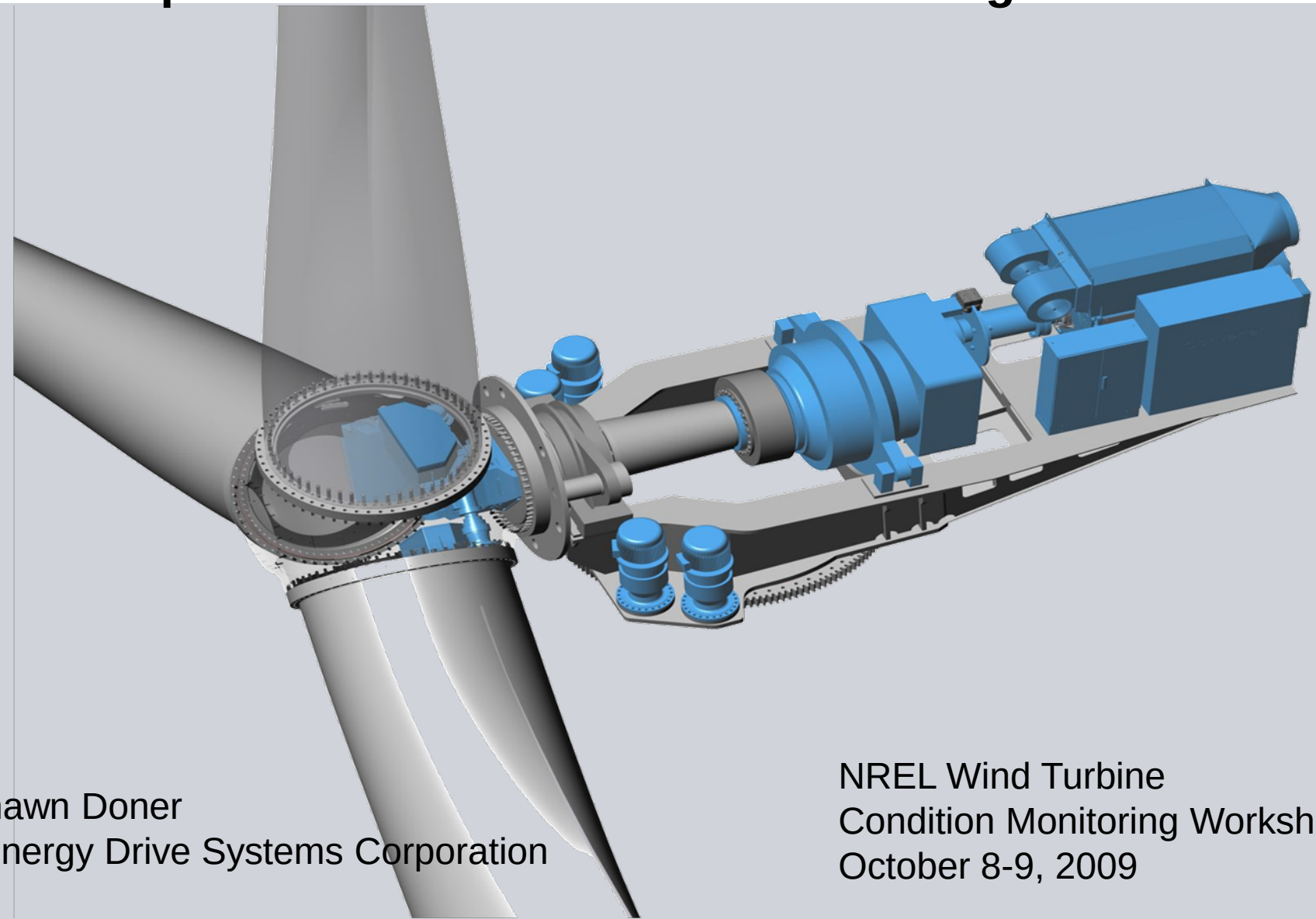

Shawn Doner
Winergy Drive Systems Corporation

NREL Wind Turbine
Condition Monitoring Workshop
October 8-9, 2009

Overview

- Principle of Condition Diagnostics
- Winergy Condition Diagnostics System
- Wind Fleet Management Platform
- Roadmap - Advanced Condition Monitoring & Systems Approach
- Highlights

Principle of Condition Diagnostics

What and why?
A predictive monitoring solution which <u>forecasts developing turbine faults</u> and <u>predicts lead time to action</u> is necessary. It must be an intelligent solution with <u>automated diagnosis</u> based on software, not people, doing the cumbersome analysis of vast amount of real-time data real-time data from large numbers of wind turbines.

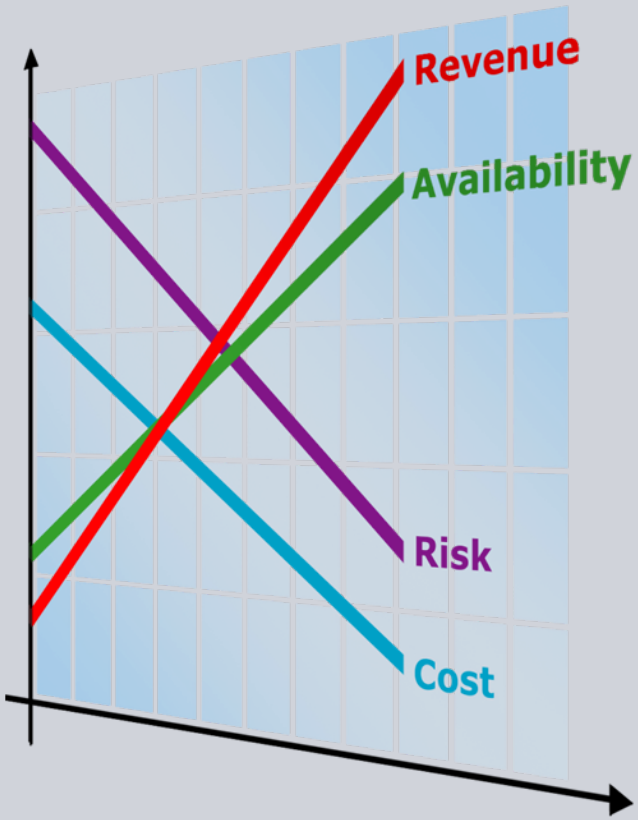

<u>Advantages:</u>

- Optimize Asset Management
- Increase Turbine Availability
- Reduce O&M Costs

Current Condition Monitoring Techniques

Human Sense (Hearing, Seeing, Feeling, Smelling)

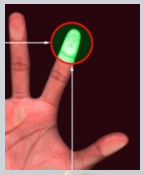

Bore-Scope

Blade Monitoring

Oil Analysis

Vibration Monitoring

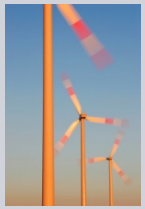

Easy to collect data but **<u>not</u>** so easy to evaluate the results

Winergy Condition Diagnostics System (CDS)

Condition Diagnostics System

- Unique signatures are continuously measured in selected operating states, and are compared to established baselines

- AutoDiagnosis™ associates deviations from baselines with unique potential fault characteristics and are, from methods collected in the Fault Library, used to express the deviation by Fault Symptom Strength

- Development in Fault Symptom Strength predicts fault development rate and generates an automated diagnosis message (AutoDiagnosis™) with a recommended action

Winergy CDS

Solution for Variable Speed / Variable Load

• Re-sampling solves the frequency smearing problem introduced by the varying speeds and loads of a wind turbine planetary gearbox

• Load Classification solves the problems of changing response level from varying load/speed

Solution for Planetary Gear Diagnostics

• Observation of planetary component health by extraction of low frequency effects from de-modulation of high frequency band vibration data

Winergy CDS

Traditional Approach

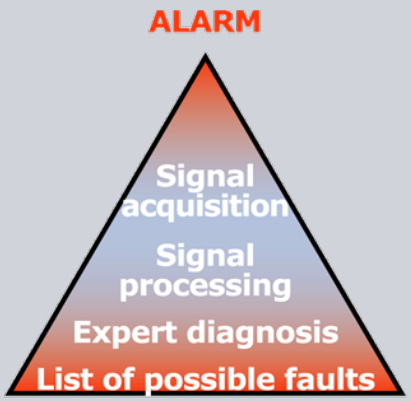

Condition Diagnostics System

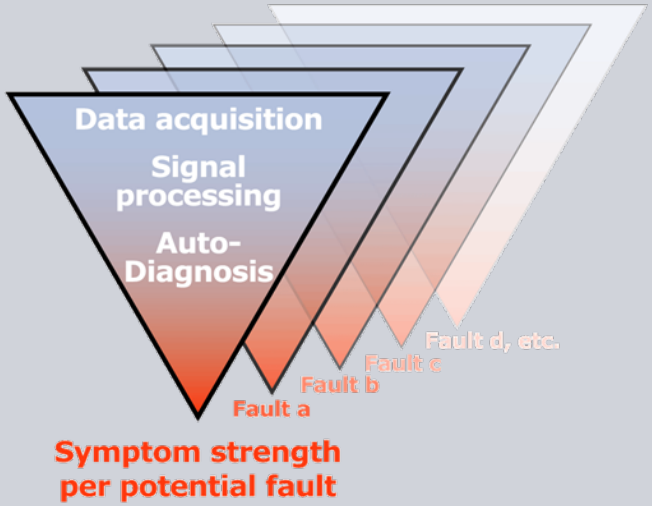

In our CDS approach, the triangle is turned upside down. We start by listing the thousands of faults that are likely to occur in a turbine. Each of these known faults are then given a symptom strength at which they reveal themselves when/if they occur.

For all of the predefined faults, the CDS acquires data (“Data acquisition”), it processes it automatically (”Signal processing”) and in the event of a fault developing, an automated diagnosis (”AutoDiagnosis™”) will be issued to the operator for action.

The Diagnostic Wheel

Library of Analyzing-Methods

TRT: Transient Signature

THS: Time History Signature

SMD: Synchronous Modulation Detection

SED: Selective Envelope Detection

CEP: Cepstrum

STA: Synchronous Time Averaging

CPB: Constant Percentage Bandwidth

SCL: Shaft Centerline

OTA: Order Tracking Analysis

FFT: Fast Fourier Transform (Complex)

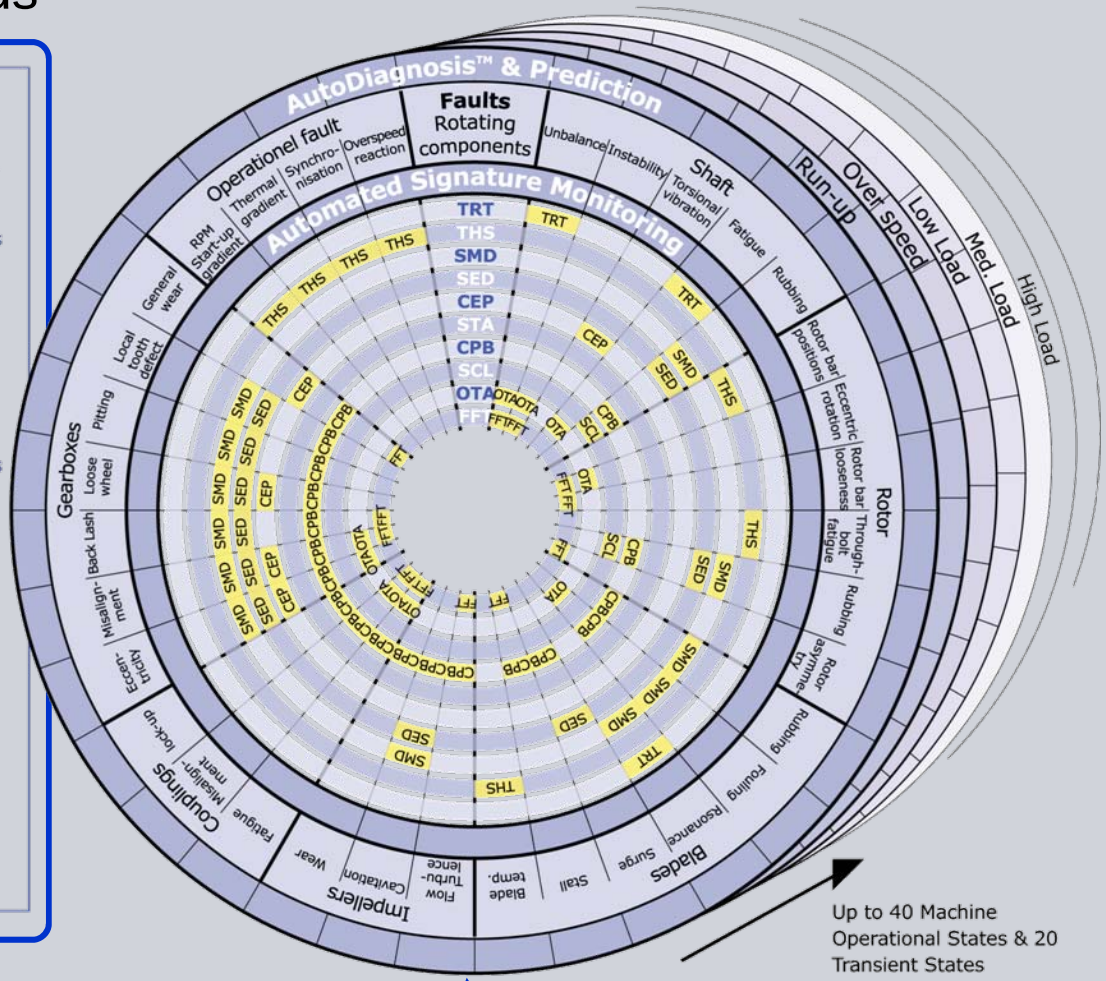

Library of Fault-Models

Up to 40 Machine Operational States & 20 Transient States

Overview of CDS Function

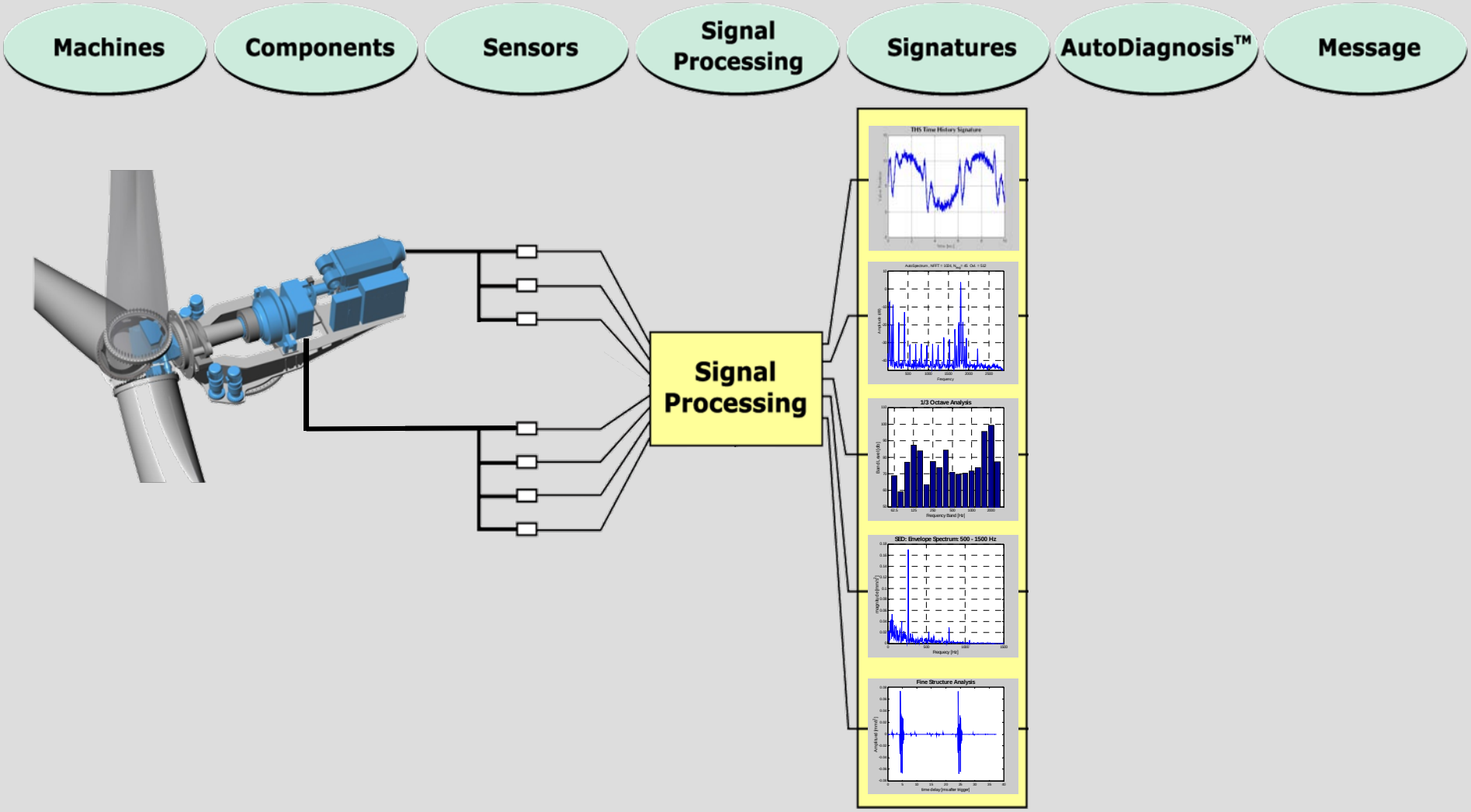

Overview of CDS Installation

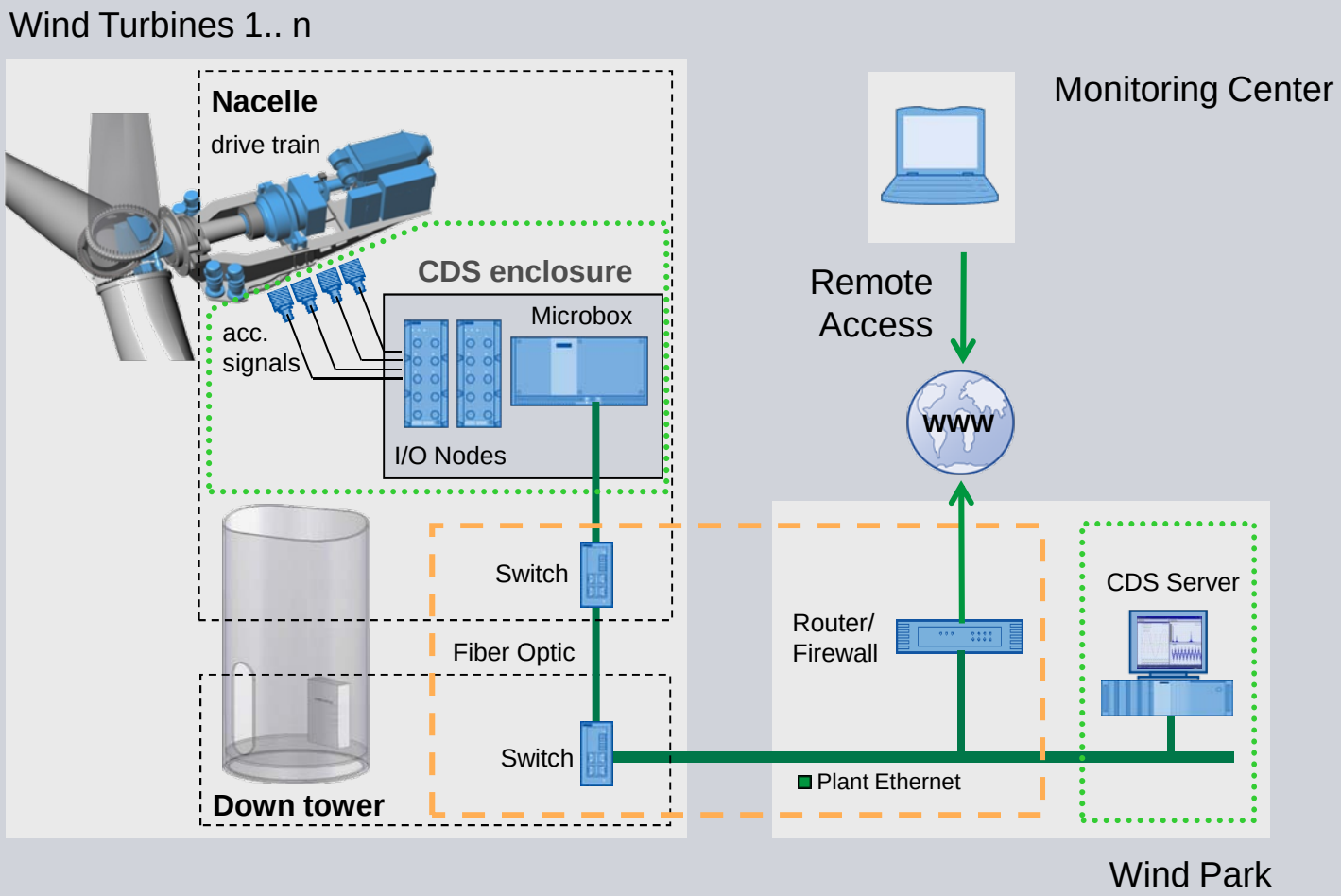

= CDS hardware = Additional required IT infrasturcture

CDS Architecture

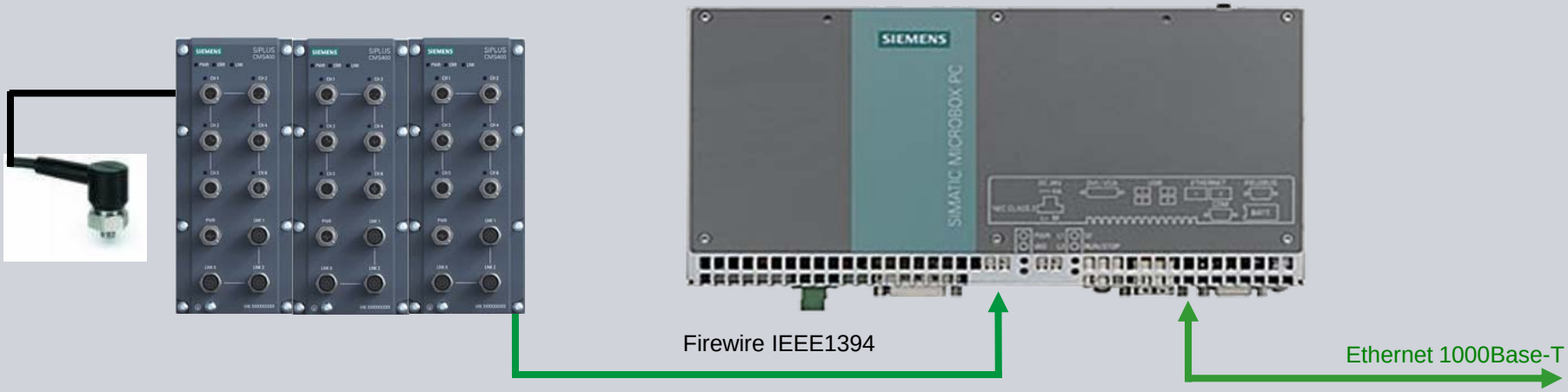

Data-Generation → Raw-Data-Capturing → Raw-Data-Conditioning → Signal-Processing → **Automated Diagnostic**

CDS Main Module Structure

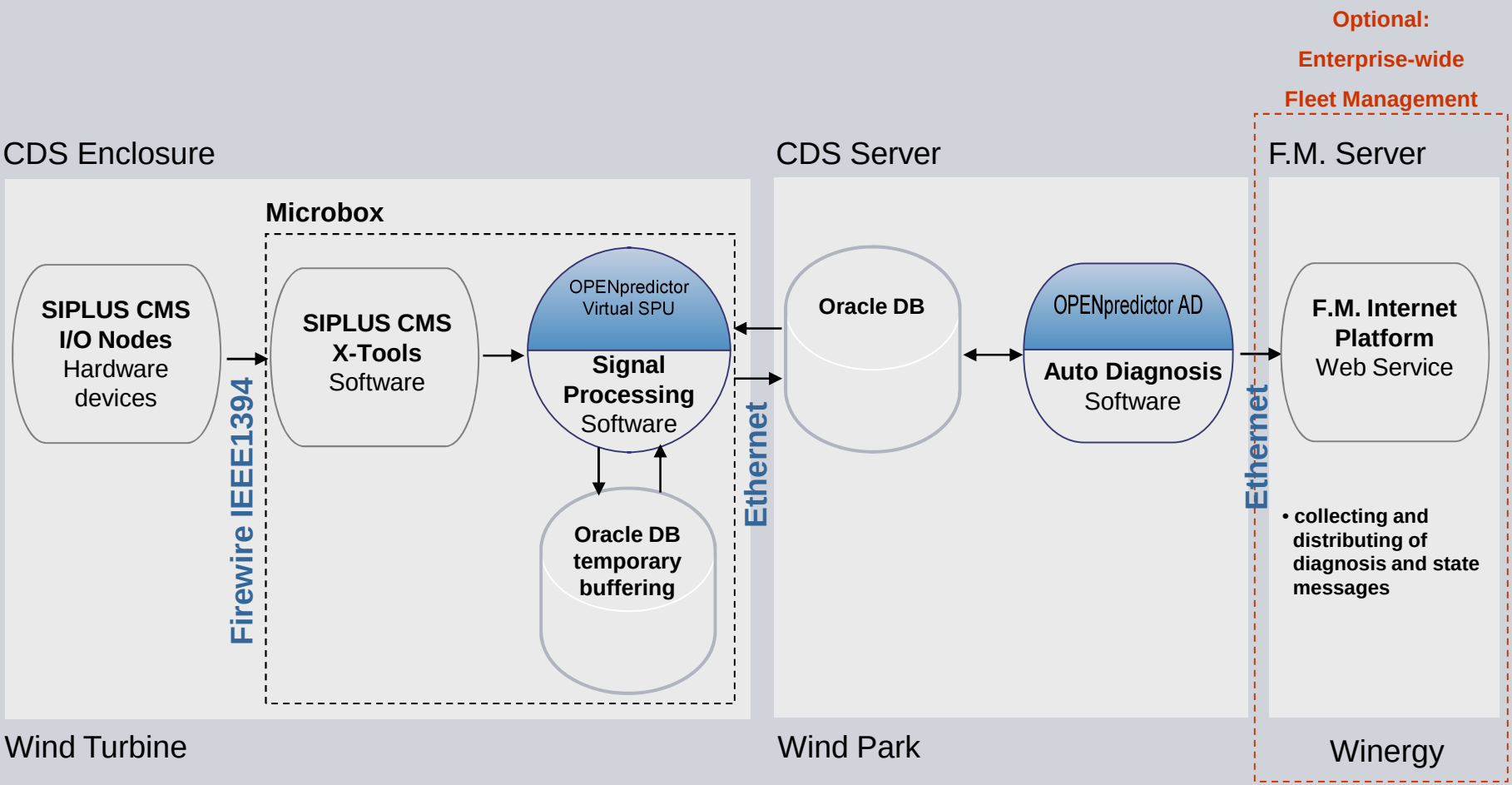

Enterprise-Wide Fleet Management Architecture

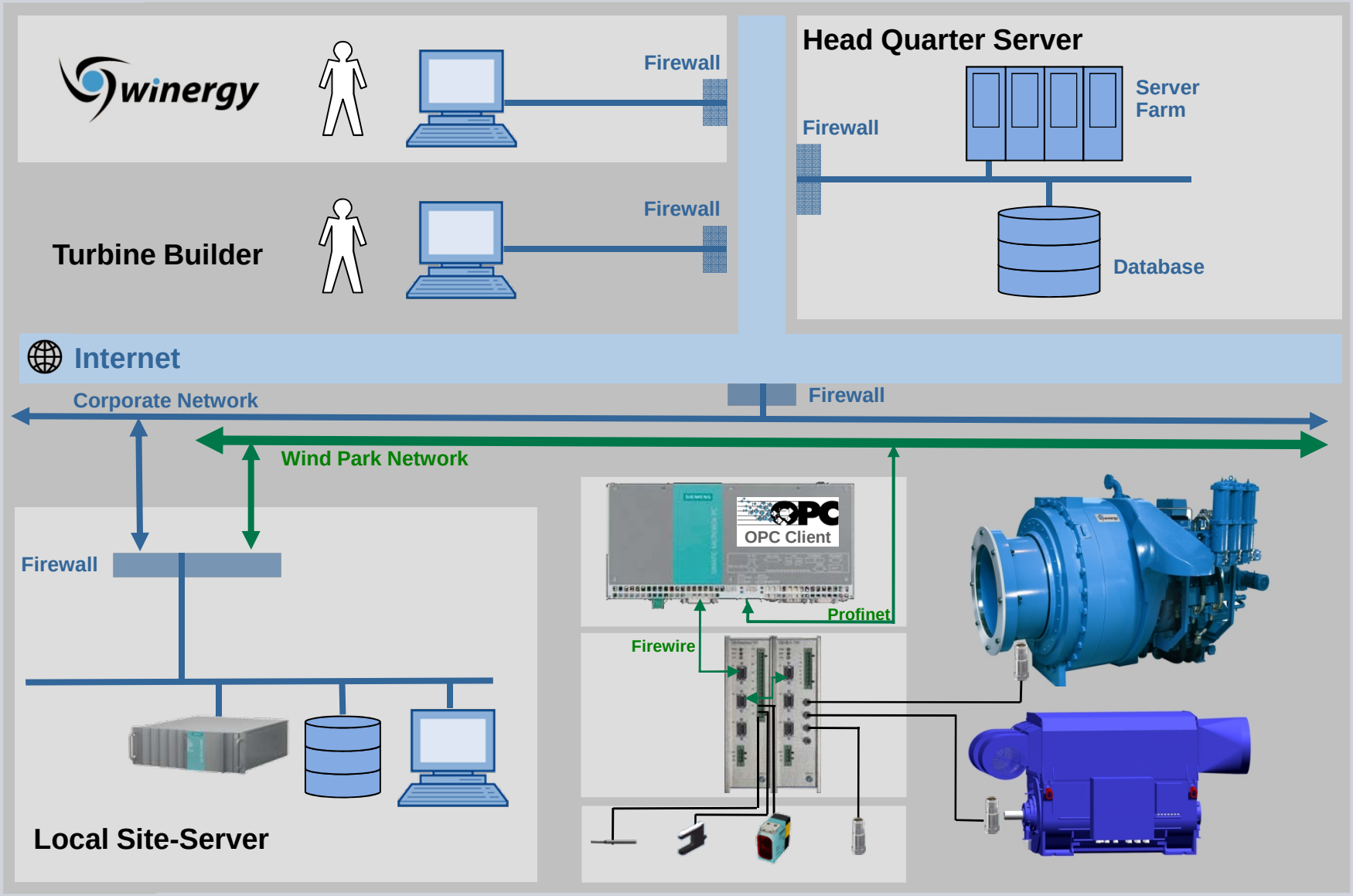

Web Based Cockpit

User Friendly Drill Down Menus

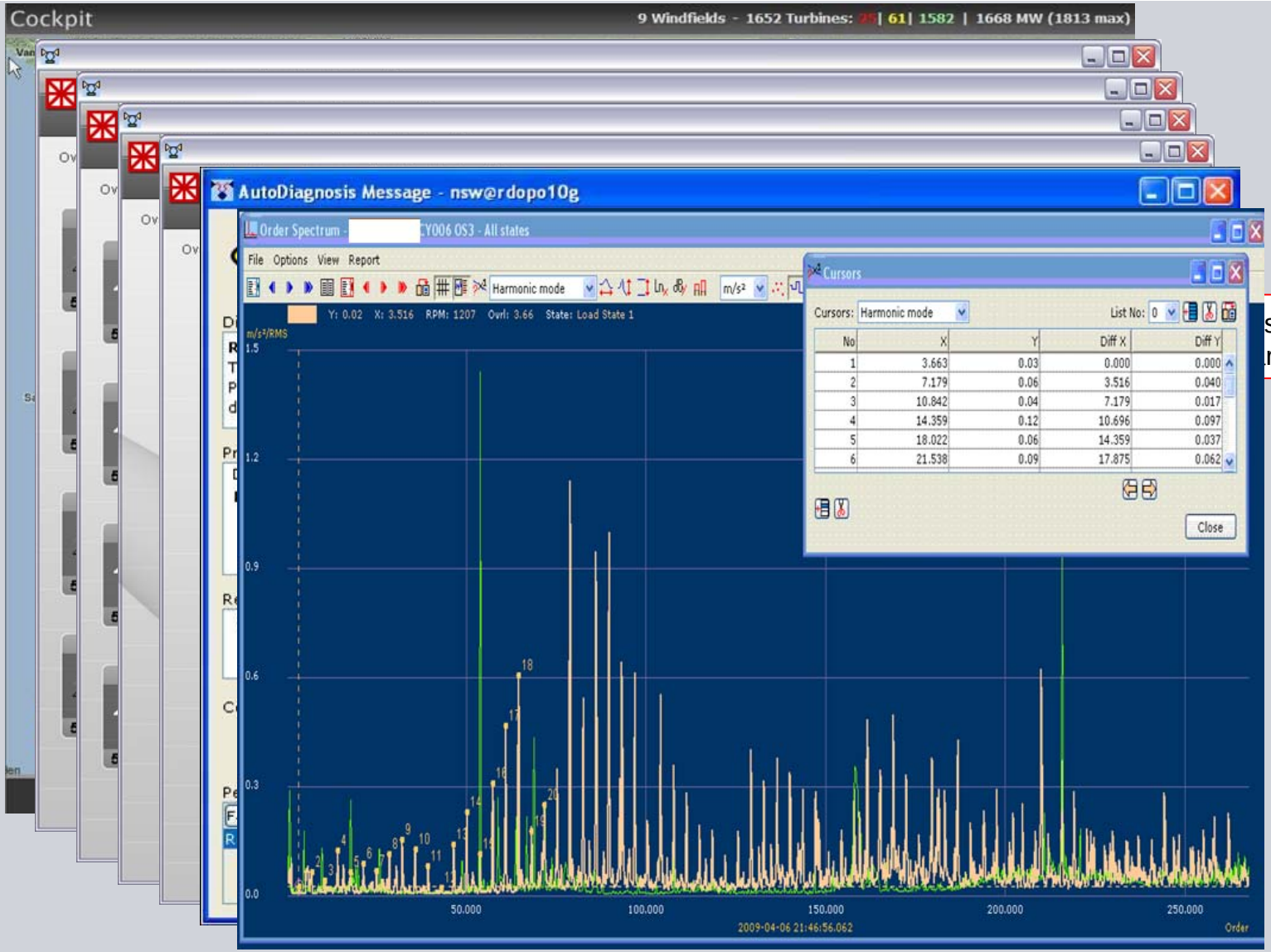

s icon for
rk.

Winergy Condition Diagnostics System

Highlights:

- Early fault detection, automatic fault diagnosis and prediction of remaining safe operational life
- Industry components based on established products
- Modular, scalable design (of +6 channels)
- Integrated or Add-on system independent of turbine make
- Uses process data via OPC interface
- Interfaces: USB, Ethernet, Profinet…etc
- Integration of Load and Oil Monitoring and turbine wide Condition Diagnostics as available
- Fleet Management – with user-friendly interface

Roadmap to Advanced Condition Monitoring
Mechatronic Gearbox

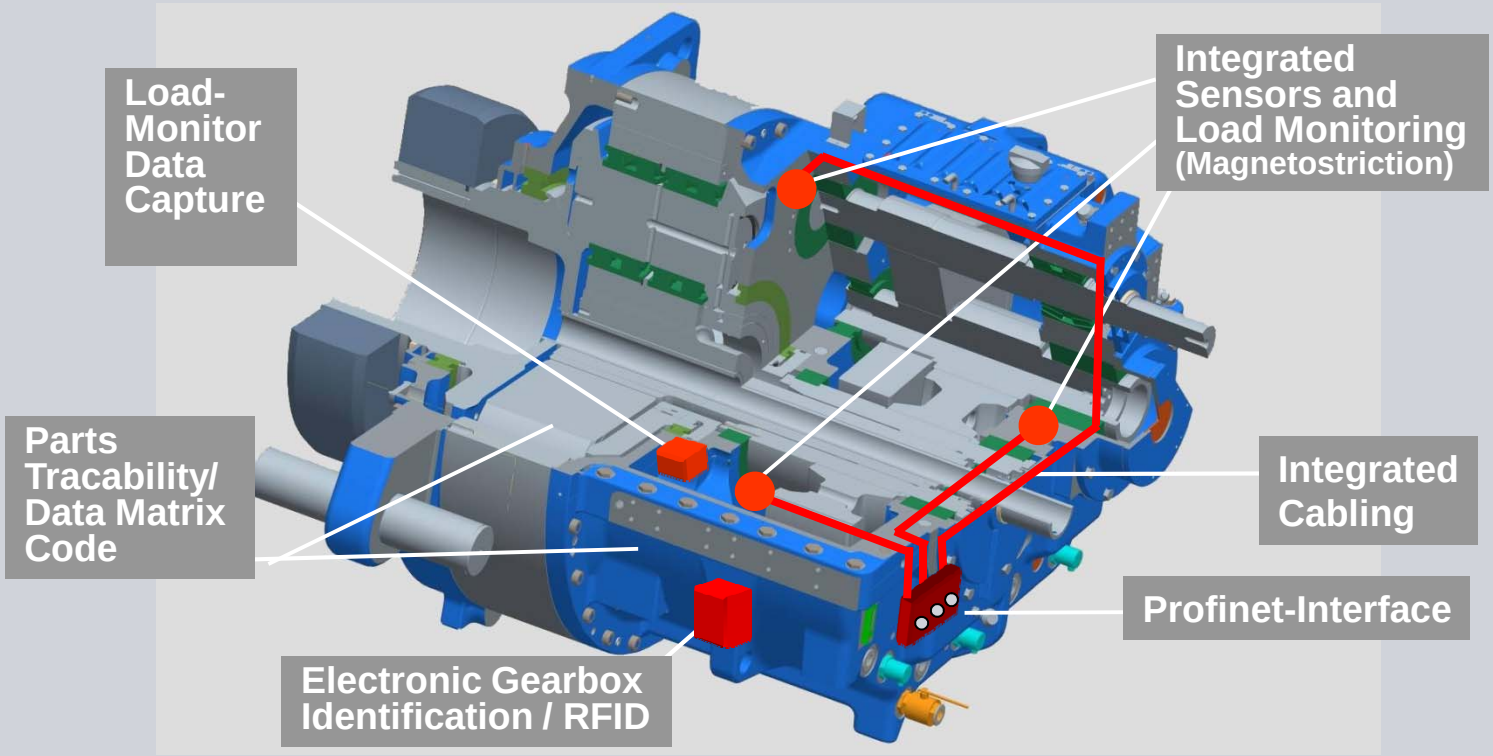

Roadmap to Advanced Condition Monitoring
Online Load-Monitoring (Magnetostriction)
Testbench Verified 2009

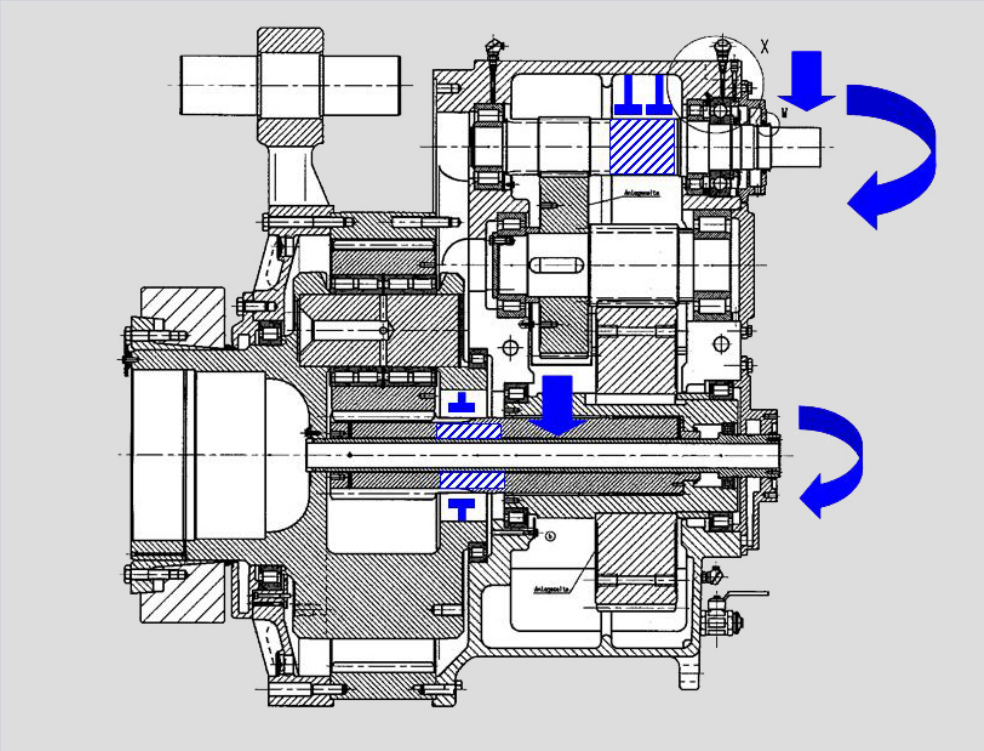

Pilotproject
Magnetostriction
- **Torque**
- **Bending**
- **Displacement**

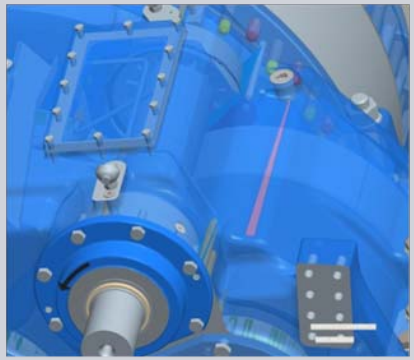

Roadmap to Advanced Condition Monitoring

Online Load-Monitoring (Magnetostriction)

Testbench Verified 2009

Roadmap to Advanced Condition Monitoring
Online Load-Monitoring (Magnetostriction)
Testbench Verified 2009

Pulse Current Modulated Encoding technology (called “PCME”) applied to an already existing shaft, to measure absolute torque

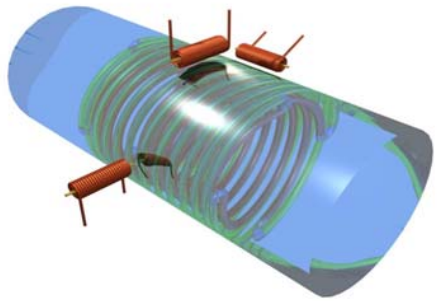

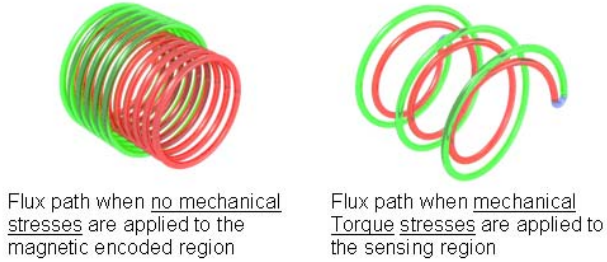

Key features of Magnetostriction Sensor Technology

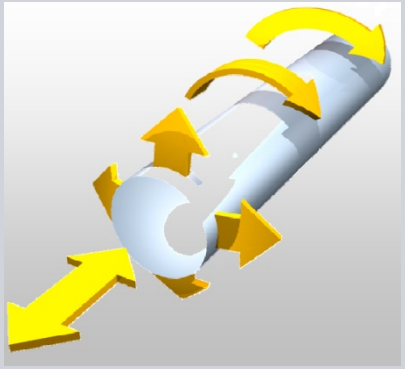

- Non-Contact sensing technology
- Measurement repeatability of 0.01%
- High signal bandwidth of up to 40 kHz
- Designed for harsh environment
- Low system complexity
- Low current consumption <10mA
- Suitable for high volume industrial applications
- No mechanical changes are necessary on the existing shaft, nor will anything be attached or glued on the shaft in any way
- The shaft keeps all of its mechanical properties

Roadmap to Advanced Condition Monitoring

Digital Fingerprinting

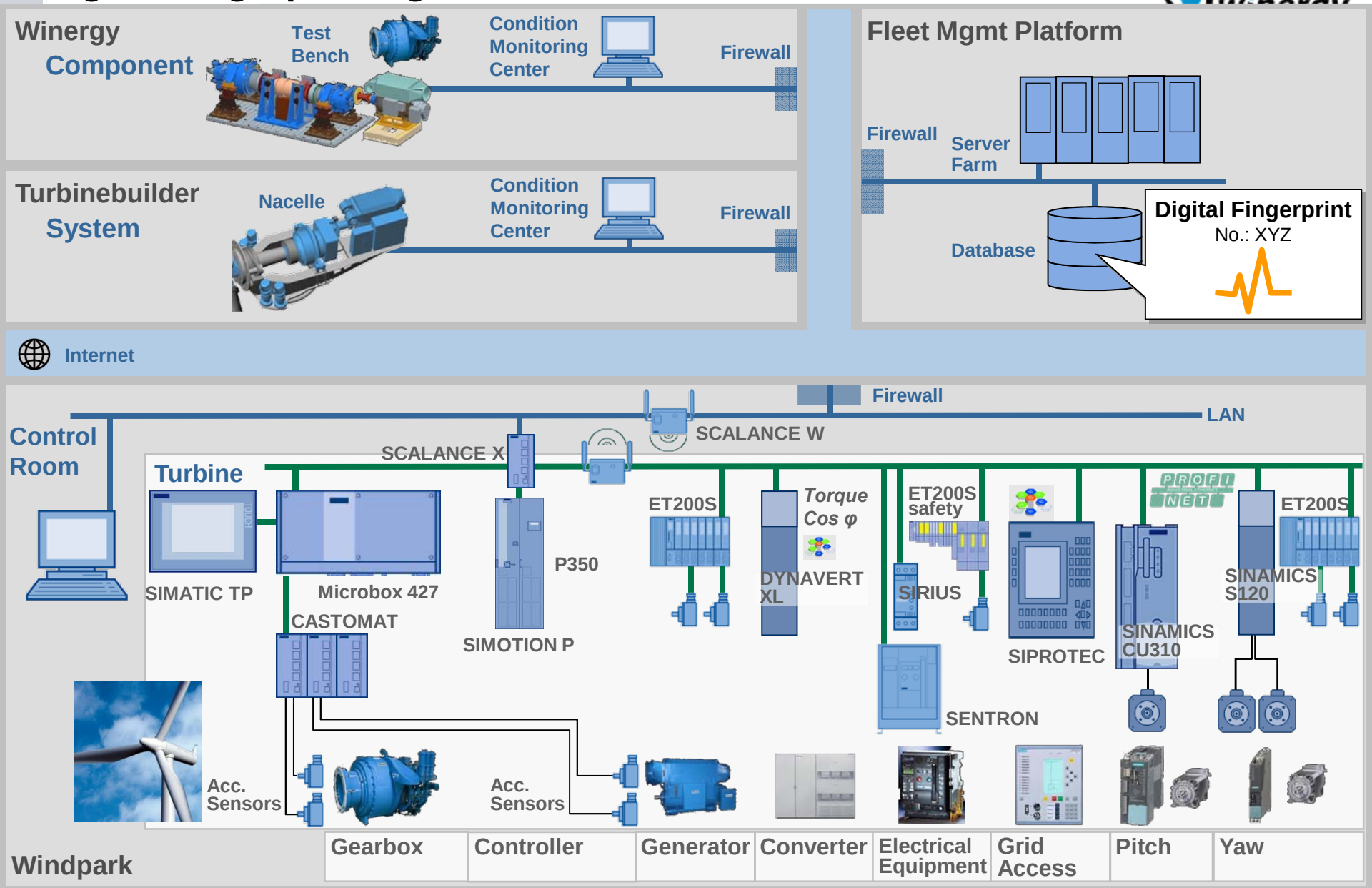

Roadmap to Advanced Condition Monitoring

Digital Fingerprinting

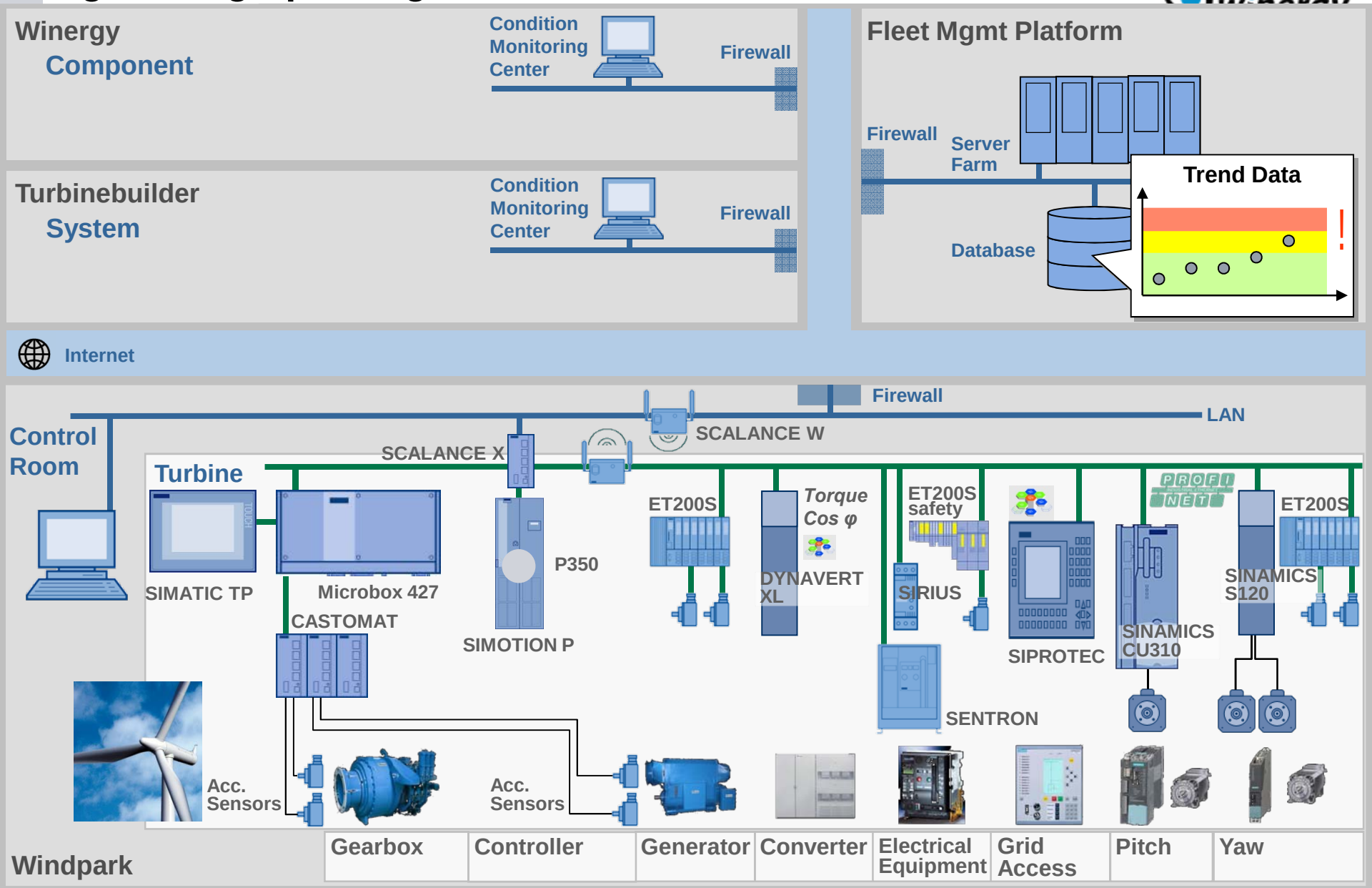

Condition Diagnostics Implementation

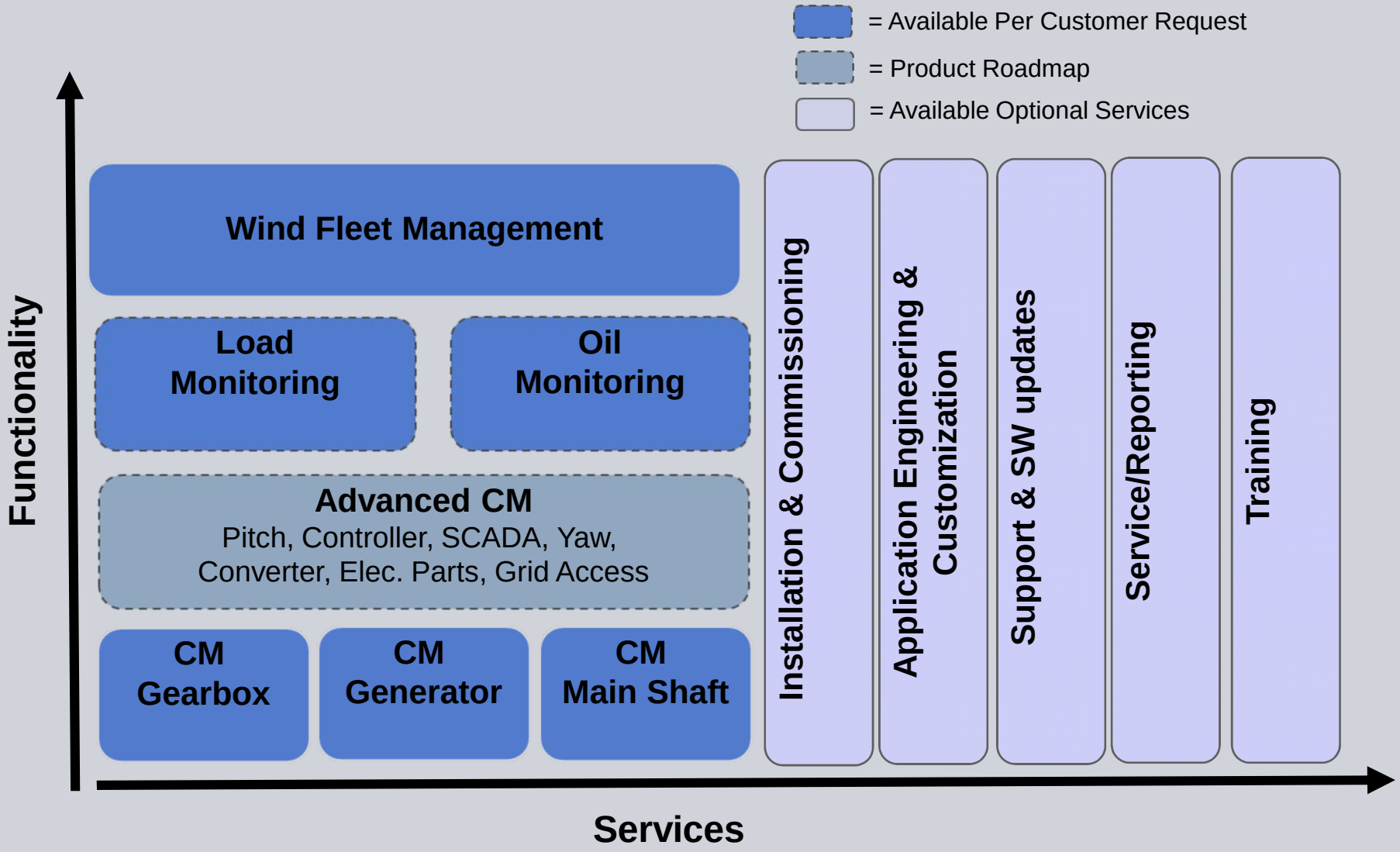

Thank you for your interest!

Shawn Doner
Sales Engineer/Specialist
Winergy Drive Systems Corporation
Tel: 847-531-7482
Email: Shawn.Doner@winergy-usa.com