Ship Collision, Risk analysis - Emergency systems - Collision dynamics

Florian Biehl, *f.biehl@tu-harburg.de*,
Peter Dalhoff, *peter.dalhoff@gl-group.com*, *www.gl-group.com/glwind*

Germanischer Lloyd
WindEnergie

Contents

1. Introduction
2. Collision Model a. Simulation
3. Collision Consequences
4. Mono Pile
5. Tripod
6. Jacket
7. Conclusions

Authors / Co-Operation

- Hamburg University of Technology (TUHH)
- Dipl.-Ing. Florian Biehl
  Prof. Dr. mult. Lehmann
- Germanischer Lloyd WindEnergie GmbH
- Peter Dalhoff

Ship Structural Design & Analysis

TUHH
Technische Universität Hamburg-Harburg

GERMANISCHER LLOYD

Is this Technology Safe and Economic?

What can happen?

What is acceptable?

Risk Analysis

Risk Assessment

objective / technical Analyses

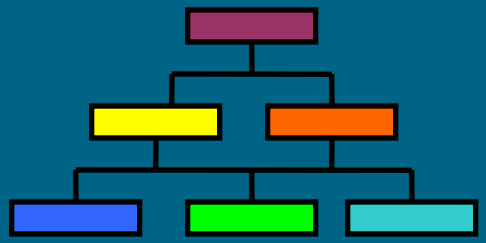

Assessment of Safety and Economy

Decision

subjective/individ. perception of risks

Risk Definition

$$R = f \bullet c$$

frequency (1/f = time between two collisions)

Consequence, e.g. amount of oil spill per collision

Acceptance Criteria for the Time between Collisions

Acceptance criteria for offshore wind farms in german waters outside the 12 sm zone	Time (years) between two collisions (1/f)
Acceptable	> 100 a – 150 a
"from Case to Case", enhanced analysis required	> 50 a and <100 a
not Acceptable	< 50 a

Risk Minimisation

- AIS (Automatic Identification System)
- Salvage Tugs
- Accident Task Force / Emergency Plan
- „Collision Friendly Design“
- ...

Ship to Ship Collisions - Experience

Ship types used in Analysis

31.600 tdw double-hull tanker

170.000 tdw bulk carrier

150.000 tdw single-hull tanker

2,300 TEU container ship

Support Structures

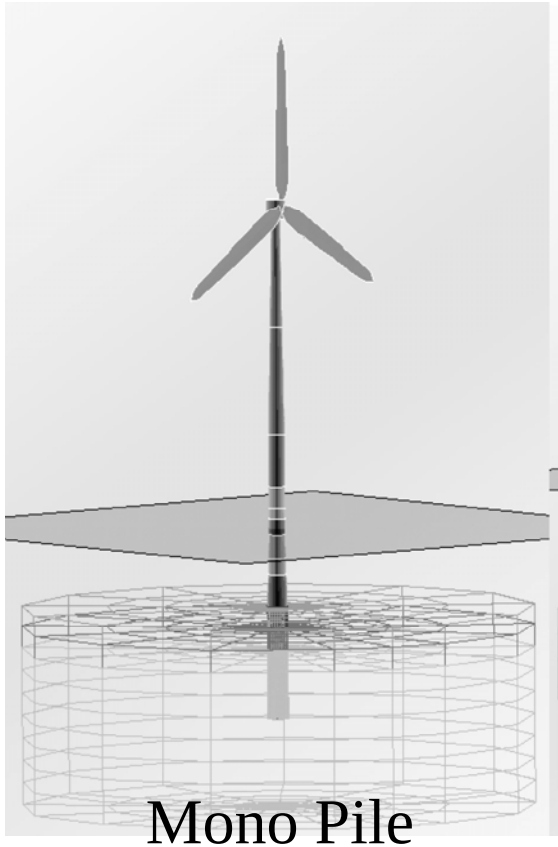

Mono Pile

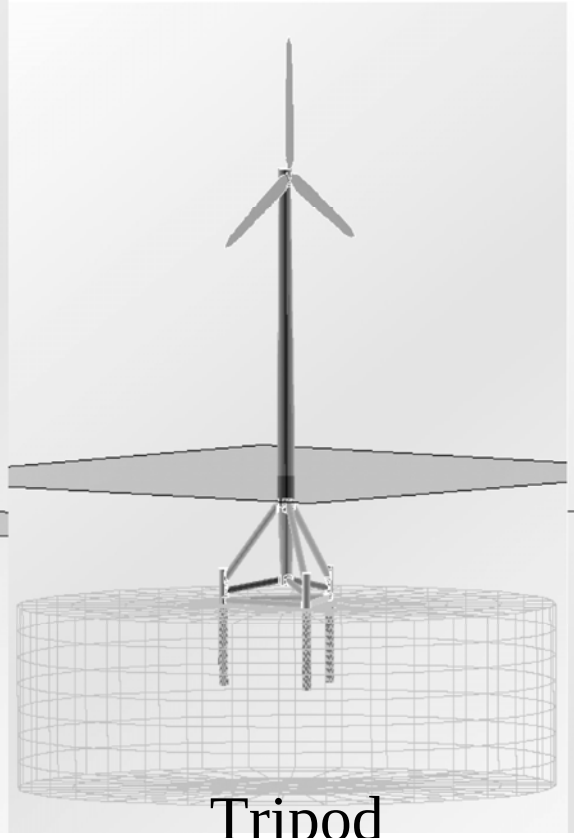

Tripod

Jacket

Collision Model: input and output data

Steel Tripod – Low Central Column

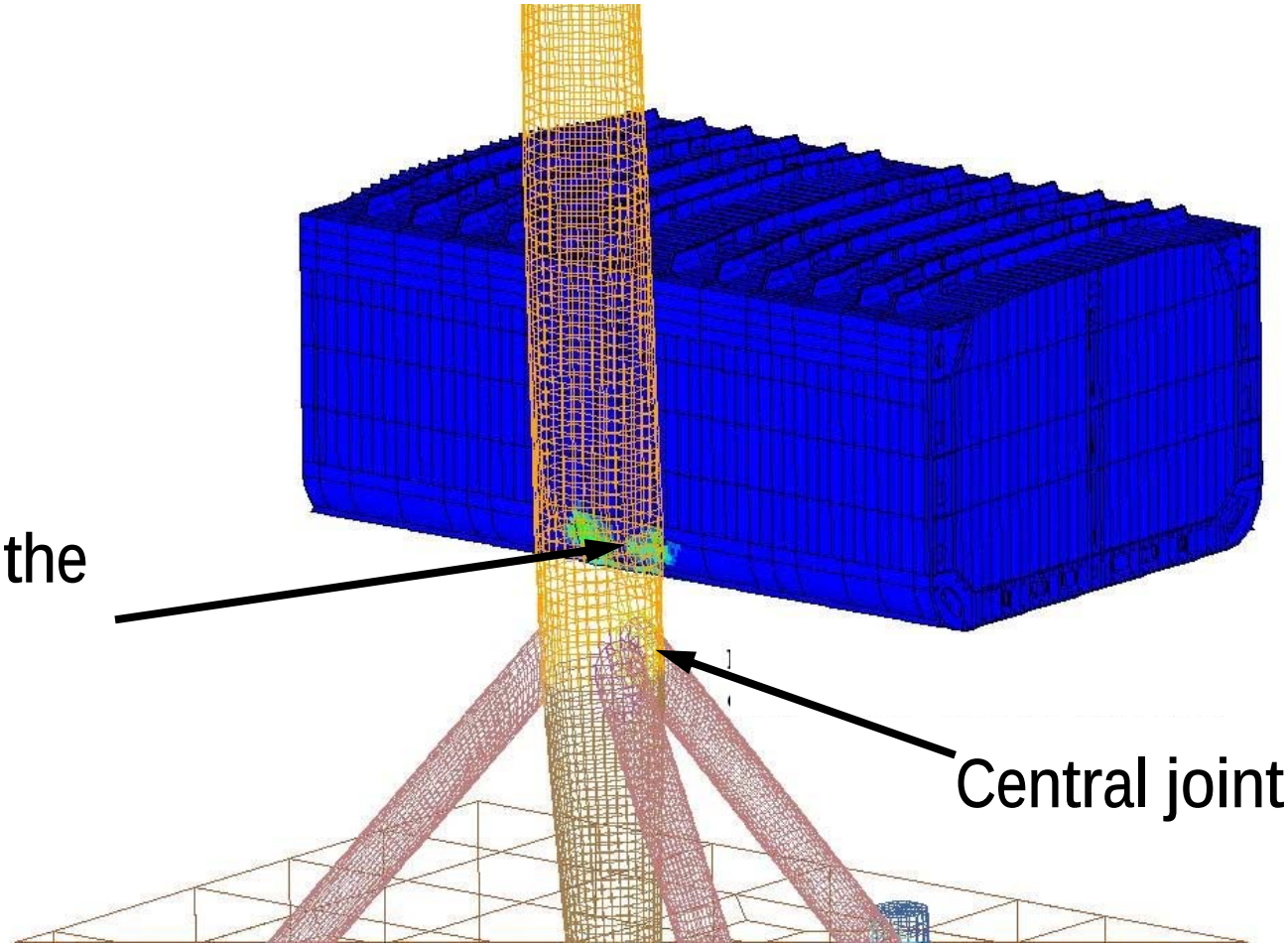

Tripod

- $\delta > 0$: Ship hull hits central column

➲ Smooth contact, lower risk for damage of ship hull

- $\delta < 0$: Ship hull hits diagonal chord and central joint

➲ Severe consequences may occur

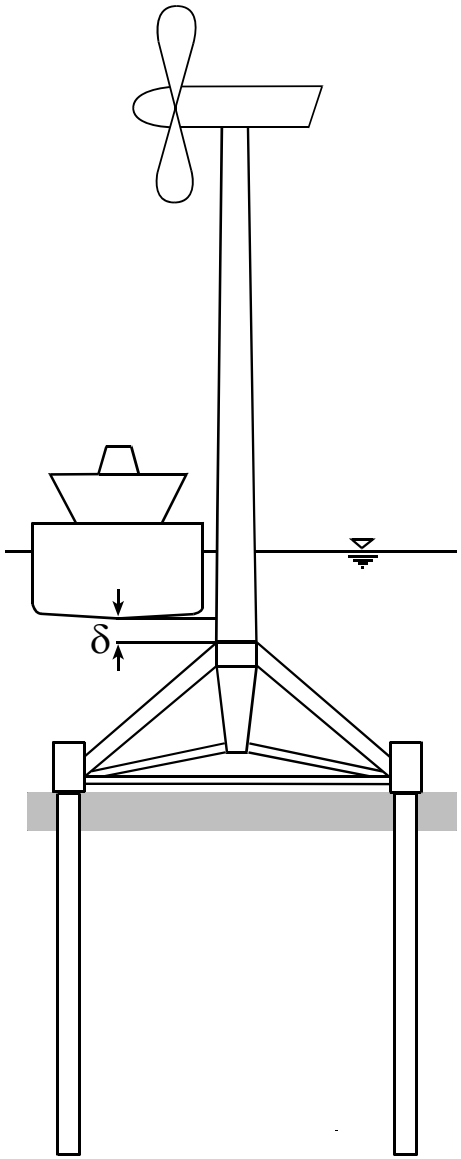

Results Matrix - Definitions

✓	Calculation of collision scenarios did not show major hazards with this type of OWT support structure and this vessel type. The design may be regarded as collision friendly for this vessel type.
(✓)	Certain hazardous scenarios could be identified by numerical simulation. Countermeasures were given. The design may be regarded as conditionally collision friendly for this vessel type.
-	Hazardous scenarios were identified and no practicable countermeasures have been developed yet. So far, design to be considered unsafe.
	Not enough investigations have been made to verify the given results.
)[1]	see 5.2.for tripod and 5.4 for gravity based foundation

Results Matrix

GRAVITY BASED	( )[1]	( )[1]	(✓)[1]	( )[1]
STEEL TRIPOD	(✓)[1]	(✓)[1]	(✓)[1]	(✓)[1]
JACKET	✓	✓	-	-
MONO PILE	✓	✓	✓	✓
	DOUBLE Hull 31.600 tdw	**CONTAINER 2.300 TEU**	**SINGLE HULL 150.000 tdw**	**BULK CARR. 170.000 tdw**

Conclusions

- Different risk minimisation methods, such as AIS, salvage tugs and „collision friendly design“
- Collision simulations for different support structure designs and diff. ship types
  - Mono Piles: Collision Friendly
  - Tripod: Collision Friendly with restrictions
  - Jacket: Depends on ship type/size
  - Gravity: Tendency towards Collision Friendly Design
- Only few numbers of simulations – further efforts necessary to generalize results
- Consecutive Faults:
  - ➲ Nacelle falling down
    - ➲ perforating ship topside and hull
      - ➲ oil spill
        - ➲ extreme unlikely event?

Thank You For Your Attention!

Peter Dalhoff, peter.dalhoff@gl-group.com , www.gl-group.com/glwind

Florian Biehl, f.biehl@tu-harburg.de

Germanischer Lloyd
WindEnergie