Modeling and Simulation the Grid Integration of Offshore Wind Turbine

Xing Zuoxia[1], Zhen Qionglin[1], Yao Xingjia[2], Lin Fei[1]
([1]Beijing Jiao tong University, 100044, China; [2] Shenyang University of Technology, 110023, China)

Abstract—This paper builds mathematic models of variable speed wind turbine and HVDC power transmission system, including HVDC-VSC model, power transfer model, asynchronous generator model etc. Finally, it uses Matlab tools to do simulation, gets results and analyze.

Key words— HVDC, wind power, model, simulation

I. INTRODUCTION

Because the fix speed stall regulated wind turbine only can get maximum power capture efficiency at one operating point, variable speed wind turbine is becoming more popular for its optimal tip speed ratio operation and higher power capture efficiency[1].

The variable wind turbine is flexible get connected to the grid through one power electric apparatus as Fig 1 shows. Normally, the voltage source converter(VSC) power converter is AC-DC-AC structure, and rectifier and inverter is all controllable switch apparatus. Any kind of generator can use this grid connection fashion.

With the development of offshore wind park, DC power transmission is more suitable for this distributed power generation system [2]. One configuration of offshore wind park is showed as Fig 2. Its main advantages are embodied as follows:

- Easy to extend for power system, especially suit for distributed solar and wind power generation system ;
- Low line loss and longer transmit distance than AC power transmission ;
- By VSC control, the local wind turbine can get maximum wind power ;

By VSC control, the wind turbine output power quality can be improved and avoid disadvantage influence to the grid.

In this paper, mainly research this HVDC-VSC wind power transmission system how to realize output current and power control. First, it modeling HVDC-VSC rectifier current control principle, the wind turbine kinetic energy conversion process, asynchronous generator voltage, current , torque equation etc. Then do simulation and analyses by Matlab Simulink tools.

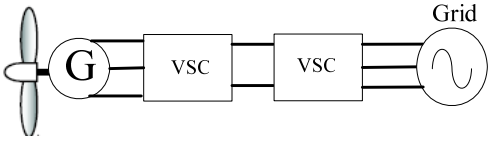

Fig 1: Variable speed wind turbine get connected to the Grid

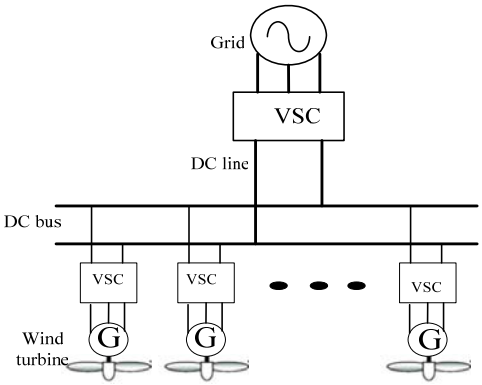

Fig 2: offshore wind park HVDC transmission system

II. HVDC-VSC RECTIFIER PRINCIPLE

HVDC-VSC station is consisted of commuting station and HVDC transmission line. The configuration of single bridge or double bridge, current-fed-back-to-ground HVDC-VSC station, is shown as Fig 3. The main components including:

(1) Transformer, change AC voltage to GTO or IGBT bridge needed voltage level.

(2) commuting bridge, is made up of high speed power electric switches with gate turn off capabilities such as GTOs or IGBTs, take the pole of rectifier or inverter, ac→dc or dc→ac. Ordinary, the rectifier or inverter is three phase circuit and each bridge has six arms, sometimes named as six pulses commuter.

(3) Current calm reactor, it can decrease fluctuation of DC voltage and current and restrain DC current mount up speed.

(4)DC filters, used in DC line, filter 6nth harmonic wave for single bridge and filter 12nth harmonic wave for double bridge($n=1,2,\ldots$).

(5)AC filters, used in AC line, filter (6n+1)th harmonic wave absorbed by single-tune filter for single bridge, such as 5th,7th,11th harmonic waves, filter (12n+1)th harmonic wave for double bridge, such as 11th, 13th harmonic waves.

(6) Reactive power compensation apparatus, it can offer reactive power needed by HVDC system operating and take role of voltage regulator. Ordinary, it can be static compensation capacitors (including filter and capacitors), tunable phase compensator or static reactive power compensator.

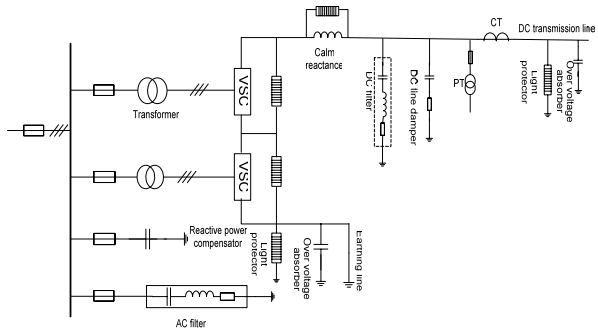

Fig 3: HVDC commuting station configuration

1) rectifier principle and mathematical model:

Rectifier circuit is shown as Fig 4, the controllable current change form one switch to another switch when the following condition is satisfied:

$$\frac{\sqrt{2}E}{2X_C}\left[\cos\alpha - \cos(\alpha+\gamma)\right] = I_d \qquad (1)$$

Among which, α is trigger angle, γ is phase change angle, $\frac{\sqrt{2}E}{2X_C}$ is short circuit current peak value when two phase of transformer second side is short circuit, $X_C = \omega L_C$, L_C is inner inductance, E is line-to-line voltage rms, I_d is current following calm reactance.

Direct current from rectifier can be described as:

$$U_d = \frac{1}{T}\int_T u_d dt = \frac{1}{T}\int_T (u_m - u_n)dt \qquad (2)$$

Among which, $u_d = u_m - u_n$, the cycle T can be 60^0, the average value can be:

$$\begin{aligned} U_d &= \frac{3}{\pi}\left\{\int_{\alpha}^{\alpha+\gamma}\left[\tfrac{1}{2}(e_a+e_c)-e_b\right]d\omega t + \int_{\alpha+\gamma}^{\alpha+\frac{\pi}{3}}(e_a-e_b)d\omega t\right\} \\ &= \frac{3}{\pi}\left[\int_{\alpha}^{\alpha+\frac{\pi}{3}}(e_a-e_b)d\omega t - \int_{\alpha}^{\alpha+\gamma}\tfrac{1}{2}(e_a-e_c)d\omega t\right] \qquad (3) \\ &= \frac{3\sqrt{2}}{\pi}E\cos\alpha - \frac{3}{\pi}X_C I_d \end{aligned}$$

Obviously, maximum open circuit DC voltage is $U_d = U_{d0} = \frac{3\sqrt{2}}{\pi}E$ happened when $\alpha = 0$ and $I_d \approx 0$. $\frac{3}{\pi}X_C I_d$ is named as "phase switch voltage drop ", and this formula value approach 0 when $X_C \to 0$

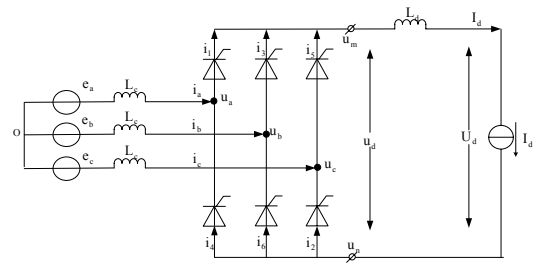

Fig 4: rectifier operating principle

2) R*elation of rectifier AC phase current I and DC current Id:*

The current go through switch can be seen as rectangle wave whose phase range is 120^0, magnitude is Id. AC current rms of each phase is:

$$I = \sqrt{\frac{1}{\pi}I_d^2 \times \frac{2\pi}{3}} = \sqrt{\frac{2}{3}}I_d \approx 0.816\,I_d \qquad (4)$$

I is the function of α and γ if consider influence of phase switching, approximately, it can be described as follows:

$$I \approx 0.78 I_d = \frac{\sqrt{6}}{\pi}I_d \qquad (5)$$

3) A*ctive power and reactive power:*

According to power equilibrium, we can get:

$$\sqrt{3}EI\cos\phi = U_d I_d \qquad (6)$$

As the case of $I \approx \frac{\sqrt{6}}{\pi}I_d$, the before formula can be deduced as:

$$\cos\phi \approx \frac{U_d}{\frac{3\sqrt{2}}{\pi}E} = \frac{U_d}{U_{d0}} \quad \phi \in \text{first quadrant} \qquad (7)$$

The active power Pd and reactive power Qd go through rectifier can be calculated as:

$$\begin{cases} P_d = U_d I_d \\ Q_d = P_d \tan\phi \end{cases} \qquad (8)$$

Normally, $Q_d \approx (0.3 \sim 0.5)P_d$.

4) current control in rectifier :

Form above description, the voltage, current and power can be controlled by trigger angle α . In rectifier control, normally compare measured Id and demand Id*, get error, use PI or PID regulator to generate six pulses, change trigger angle α and give it to rectifier, this principle also be named as demanded current Id* control. The control principle is shown as Fig 5.

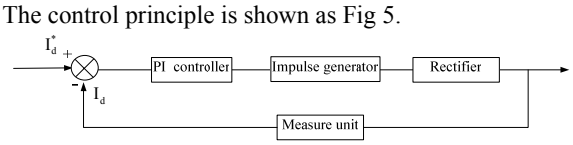

Fig 5: HVDC rectifier demanded current control principle

III. WIND TURBINE KINETIC ENERGY CONVERSION PROCESS

1) wind speed modeling :

The wind velocity usually varies considerably, as shown in Fig 6, and has a stochastic character. The wind variation can be modeled as a sum of harmonics with frequencies in the range 0.1-10Hz. Wind gust is usually also included in the wind model [3][4]：

$$v(t) = v_0\left(1 + \sum_k A_k \sin(\omega_k t)\right) + v_g(t) \qquad (9)$$

Where v_0 means value of wind velocity, A_k is amplitude of kth harmonic, ω_k is frequency of kth harmonic, $v_g(t)$ is wind gust.

Wind gusts can be modeled by the following function:

$$v_g(t) = \frac{2v_{g\max}}{1 + e^{-4(\sin(\omega_g t)-1)}} \qquad (10)$$

Where $v_{g\max}$ is gust amplitude, ω_g is gust frequency.

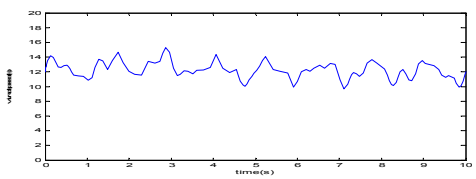

Fig 6：wind variation

2) wind stream power modeling

When the air passes across an area A, the area is swept by the rotor blades, the power in the air can be computed as:

$$P_{wind} = \frac{1}{2}\rho A v^3 \qquad (11)$$

Where ρ is air density, which varies with air pressure and temperature in accordance with the gas law [5]:

$$\rho = \frac{p}{RT} \qquad (12)$$

Where p is air pressure, T is temperature, R is gas constant, v is wind speed.

The pressure and temperature vary with the wind turbine location. Some publications [6] give formulas that enable computation of the air density as a function of the turbine elevation above sea level H:

$$\rho = \rho_0 - 1.194\times10^{-4} H \qquad (13)$$

Where $\rho_0 = 1.225 kg/m^3$ is the air density at sea level at temperature T=288K.

3) Mechanical power extracted from the wind

For given wind velocity before rotor blades v_1, rotor angular velocity ω and blade pitch angle θ, the mechanical power and torque extracted from the wind can be computed as:

$$P_{WW} = c_p(\lambda,\theta)P_{wind} = c_p(\lambda,\theta)\frac{1}{2}\rho A v_1^3 \qquad (14)$$

$$\tau_{WW} = \frac{P_{WW}}{\omega} = c_\tau(\lambda,\theta)\frac{1}{2}\rho A v_1^2 R \qquad (15)$$

Where c_p, the rotor power coefficient, is the function of the tip speed ratio and the blade pitch angle, general defined as follows:

$$c_p(\lambda,\theta) = c_1\left(c_2\frac{1}{\Lambda} - c_3\theta - c_4\theta^x - c_5\right)e^{-c_6\frac{1}{\Lambda}} \quad 6)$$

Where the coefficients $c_1 \to c_6$ and x can be different for various turbines. The parameter $\frac{1}{\Lambda}$ is defined as[7][8]:

$$\frac{1}{\Lambda} = \frac{1}{\lambda + 0.08\theta} - \frac{0.035}{1+\theta^3} \qquad (17)$$

The tip speed ratio λ can be described as:

$$\lambda = \frac{\omega R}{v_1} \qquad (18)$$

Among which, ω is rotor angle speed, R is rotor radius.

The characteristics of SUT61-1000 wind turbine's c_p curve can be presented in Fig 7 by taking into account the above parameters for various blade pitch angels θ varying range $0^0 \to 30^0$.

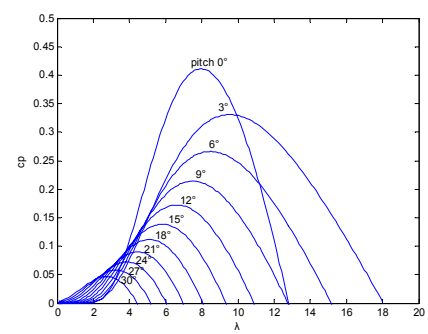

Fig 7: SUT61-1000 wind turbine c_p characteristics curve

IV. Asynchronous Generator d q Axis Mathematical Modeling

Under d q reference frame, the asynchronous generator mathematical modeling can be [9]:

Voltage model:

$$\begin{aligned} V_{qs} &= R_s i_{qs} + \tfrac{d}{dt}\phi_{qs} + \omega\phi_{ds} \\ V_{ds} &= R_s i_{ds} + \tfrac{d}{dt}\phi_{ds} - \omega\phi_{qs} \\ V'_{qr} &= R'_r i'_{qr} + \tfrac{d}{dt}\phi'_{qr} + (\omega - \omega_r)\phi'_{dr} \\ V'_{dr} &= R'_r i'_{dr} + \tfrac{d}{dt}\phi'_{dr} - (\omega - \omega_r)\phi'_{qr} \end{aligned} \qquad (19)$$

For cage induction generator, the relation is ：

$V'_{qr} = V'_{dr} = 0$.

Flux linkage model:

$$\phi_{qs} = L_s i_{qs} + L_m i'_{qr}$$
$$\phi_{ds} = L_s i_{ds} + L_m i'_{dr}$$
$$\phi'_{qr} = L'_r i'_{qr} + L_m i_{qs} \qquad (20)$$
$$\phi'_{dr} = L'_r i'_{dr} + L_m i_{ds}$$

Among which: $L_s = L_{ls} + L_m$, $L'_r = L'_{lr} + L_m$

Electromagnetic torque model:

$$T_e = 1.5p(\varphi_{ds} i_{qs} - \varphi_{qs} i_{ds}) \qquad (21)$$

The mechanical system can be described by the following equation of motion:

$$\begin{cases} p\omega_m = \dfrac{1}{2H}(T_e - F\omega_m - T_m) \\ \frac{d}{dt}\theta_m = \omega_m \end{cases} \qquad (22)$$

Among those equations, suffix "s" denotes stator side, suffix "r" denotes rotor side, L_m is mutual inductance, L_{ls} and L'_{lr} is stator and rotor leakage inductance, ω_m is rotor mechanical angular velocity, θ_m is rotor angle position, ω_r is electrical angular velocity, θ_r is electrical rotor angle position, T_e is electromagnetic torque, T_m is shaft mechanical torque, H is combined blades and generator rotor load inertia constant, F is combined blades and generator rotor load viscous friction coefficient.

V. Simulation and Result

In offshore wind park, it is assumed the wind turbine is SUT61-1000, whose development is funded by MOST "863" program "Mega-watt VSCF wind turbine" , the generator is asynchronous machine, rated wind speed is 12m/s, the detail parameters is as follows:

Wind turbine data:		Generator data:	
Mean wind speed	12m/s	Nominal power	1000kW
Pitch angle	0 deg	Nominal voltage	690VAC
Rotor speed	21rpm	Frequency	60Hz
Rotor diameter	61m	Rated current	836.7A

The other simulation data:

$$c_1 = 0.5, c_2 = 116, c_3 = 0.4, c_4 = 0, c_5 = 5, c_6 = 21$$

(x is not available because of $c_4 = 0$).

The simulation configuration is as Fig 8 shows, based on Matlab Simulink tools. Among this figure, Turbine unit is wind turbine kinetic energy conversion model, generator unit including wound rotor asynchronous machine and exciting system, measurement unit mainly finish voltage and current measure and output value calculate.

For HVDC-SVC rectifier current control, the current error signal is input to PI regulator, then output to synchronous 6-pulse generator, to control the bride trigger time and sequence. The configuration is as Fig 9 shows.

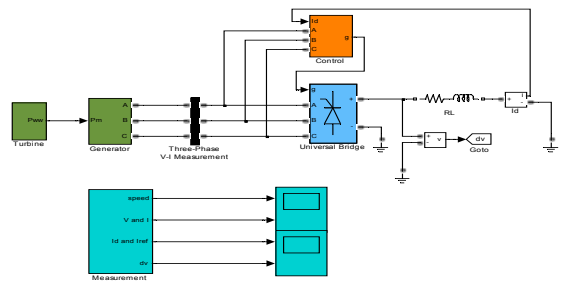

Fig 8: HVDC-SVC wind power transmission system simulation configuration

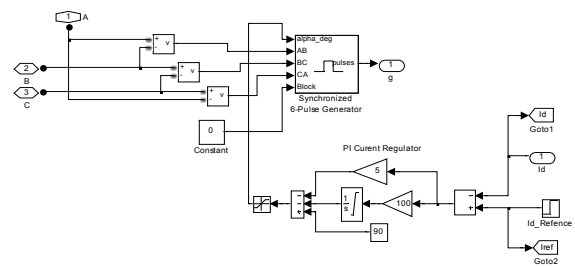

Fig 9: bridge switch control simulation configuration

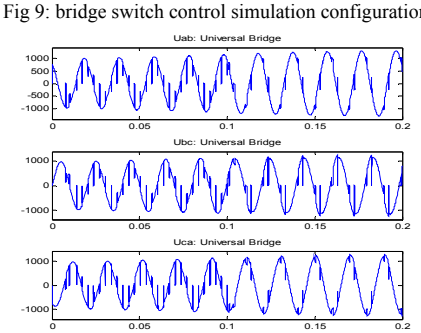

Fig 10: voltage output form generator

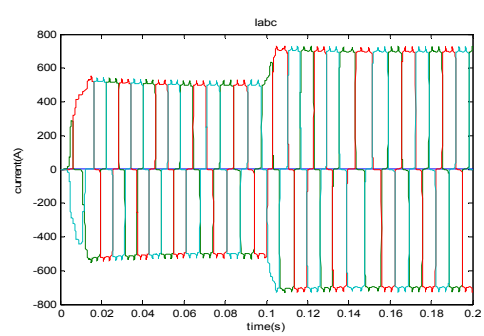

Fig 11: current output form generator

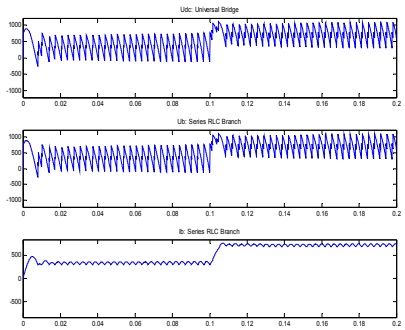

Fig 12: voltage and current output from rectifier

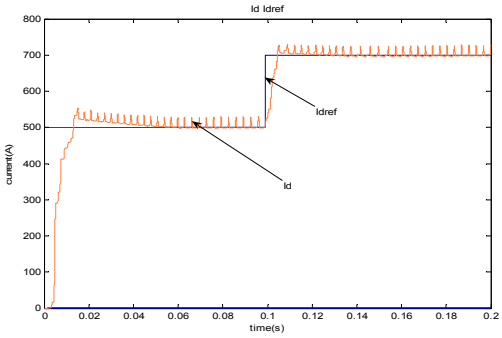

Fig 13: compare of demand current and measured current form rectifier

Form above Fig 10-13, we can see the VSC DC current reference value trips from 500 to 700 at time of 0.1s,the controller can fast track current demand, regulate the HVDC-VSC current output, then the output power is controllable also.

VI. Conclusion

This paper mainly talked about HVDC-VSC offshore wind power transmission system, researched how to realize output current and power control. Finally it verified the control principle by simulation.

References

[1]. F.Blaabjerg,Z.Chen,S.B.Kjaer. Power electronics as efficient interface in dispersed power generation systems. IEEE Trans. Power Electron.,2004,19 (5):1184-1194

[2]. W.Lu,B.T.Ooi. Optimal acquisition and aggregation of offshore wind power by multiterminal voltage source HVDC. IEEE Trans. Power Delievery,2003,18(1):201-206

[3]. Z.lubosny, Wind Turbine Operation in Electric Power Systems Advanced Modeling[M], Springer-Verlag Berlin Heidelberg 2003, printed in Germany. P92-96

[4]. Slootweg, J.G.; de Haan, S.W.H.; Polinder, H.; Kling, W.L.; General model for representing variable speed wind turbines in power system dynamics simulations,Power Systems, IEEE Transactions on Volume 18, Issue 1, Feb. 2003 Page(s):144 – 151

[5]. J.F. Manwell, J.G. McGowan and A.L. Rogers, Wind Energy Explained, 2002, John Wiley & Sons Ltd, Baffins Lane, Chichester. P83-110

[6]. Patel MR (1999), wind and solar power systems. CRC Press, New York

[7]. Anderson PM, Bose A (1983) Stability simulation of wind turbine systems, IEEE Trans Power Appar and Syst, Vol PAS-102, No 12, p3791-3795

[8]. Hau E (2000) Windturbines: fundamentals, technologies, application, economics. Springer Verlag, Berlin

[9]. I. Boldea and S.A. Nesar," Electric Machine Dynamics", MACMILLAN PUBLISHING COMPANY, New York,1986.