Concrete is the Future

Per Vølund, Energi E2

Concrete is the Future

Per Vølund, Energi E2

Content

- Offshore Wind MUST find Cost Reductions
- What are Concrete Gravity Foundations?
- Concrete is Low Cost compared to Steel
- Installation
- Weather Risk
- Solution Phocus
- E2 needs Partner for the Concrete Future
- Conclusions

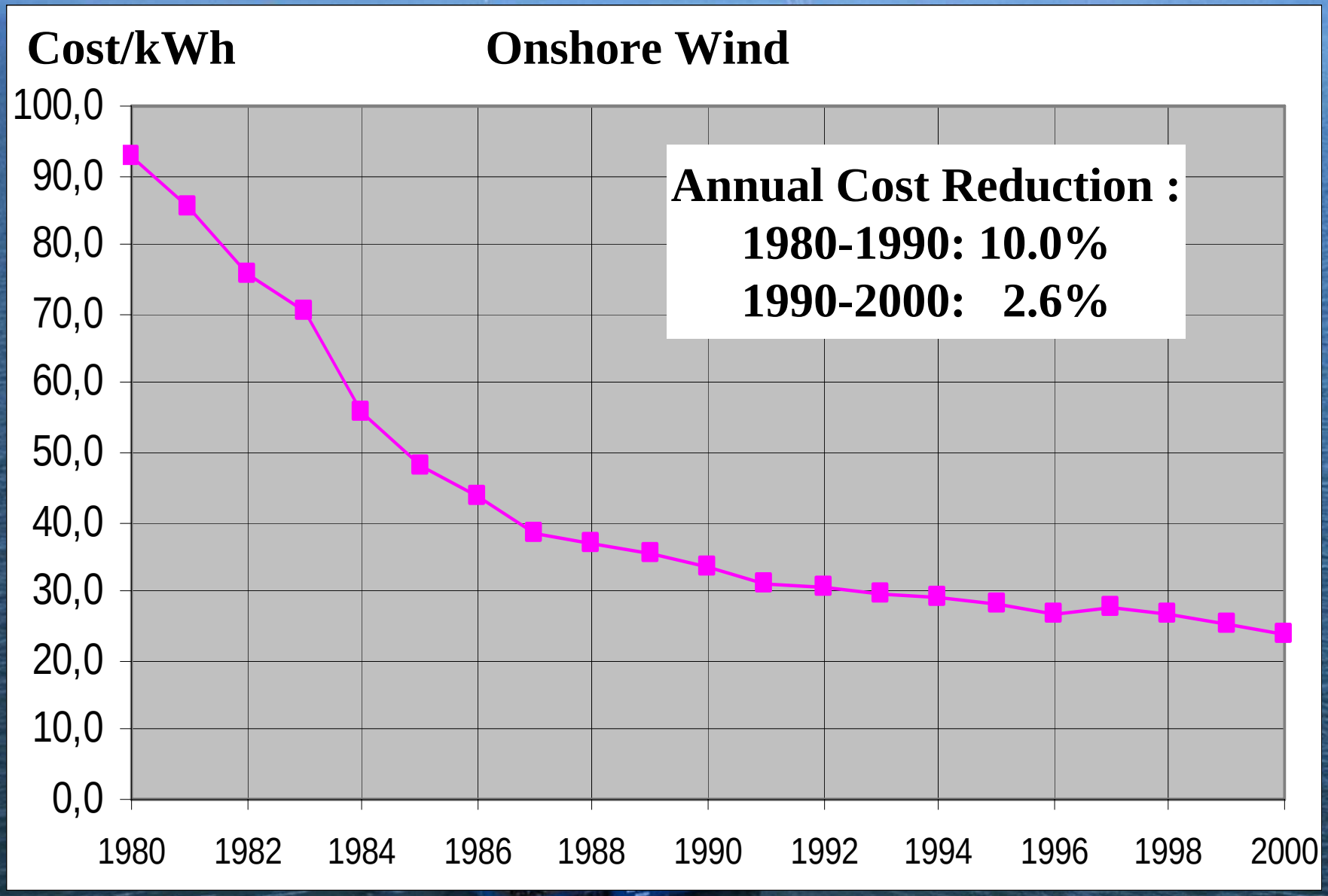
Cost/kWh
Onshore Wind
100,0
90,0
80,0
70,0
60,0
50,0
40,0
30,0
20,0
10,0
0,0
1980
1982
1984
1986
1988
1990
1992
1994
1996
1998
2000
Annual Cost Reduction :
1980-1990: 10.0%
1990-2000: 2.6%

Installed Wind Power in the World

- Annual and Cumulative -

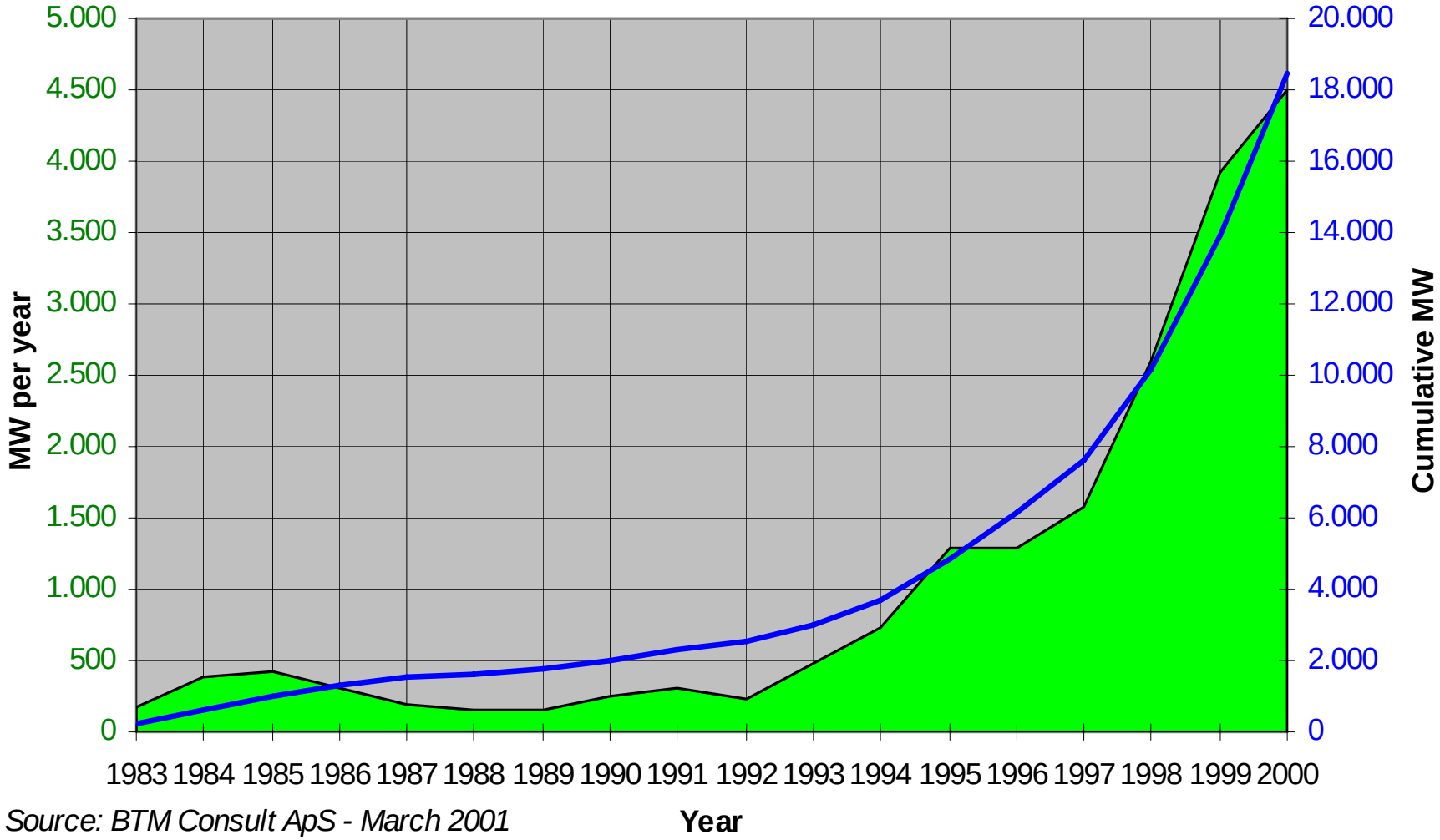

Source: BTM Consult ApS - March 2001

(m.Euro/MW)	Middelgr. 2000	Nysted 2003	LAW/HR2 2008
Turbines	0.67	0.79	
Foundations	0.32	0.26	
Internal Grid	0.12	0.08	
Grid Connect.	0.12	0.18	
Other	0.10	0.18	
Total	1.33	1.50	0.95
m.Euro/MWh	**0.54**	**0.41**	**0.26**

Concrete is the Future

Per Vølund, Energi E2

We want exponential growth.

=>

We MUST find cost reductions.

What are Concrete Foundations?

Middelgrunden 2000

Nysted 2003

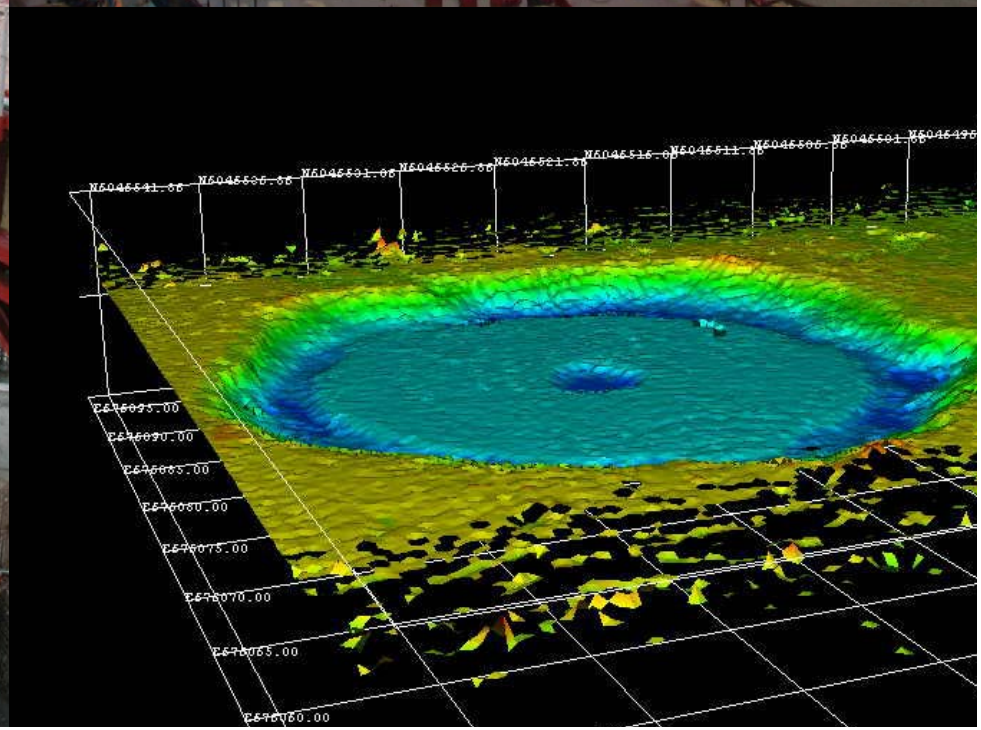

London Array West 2008

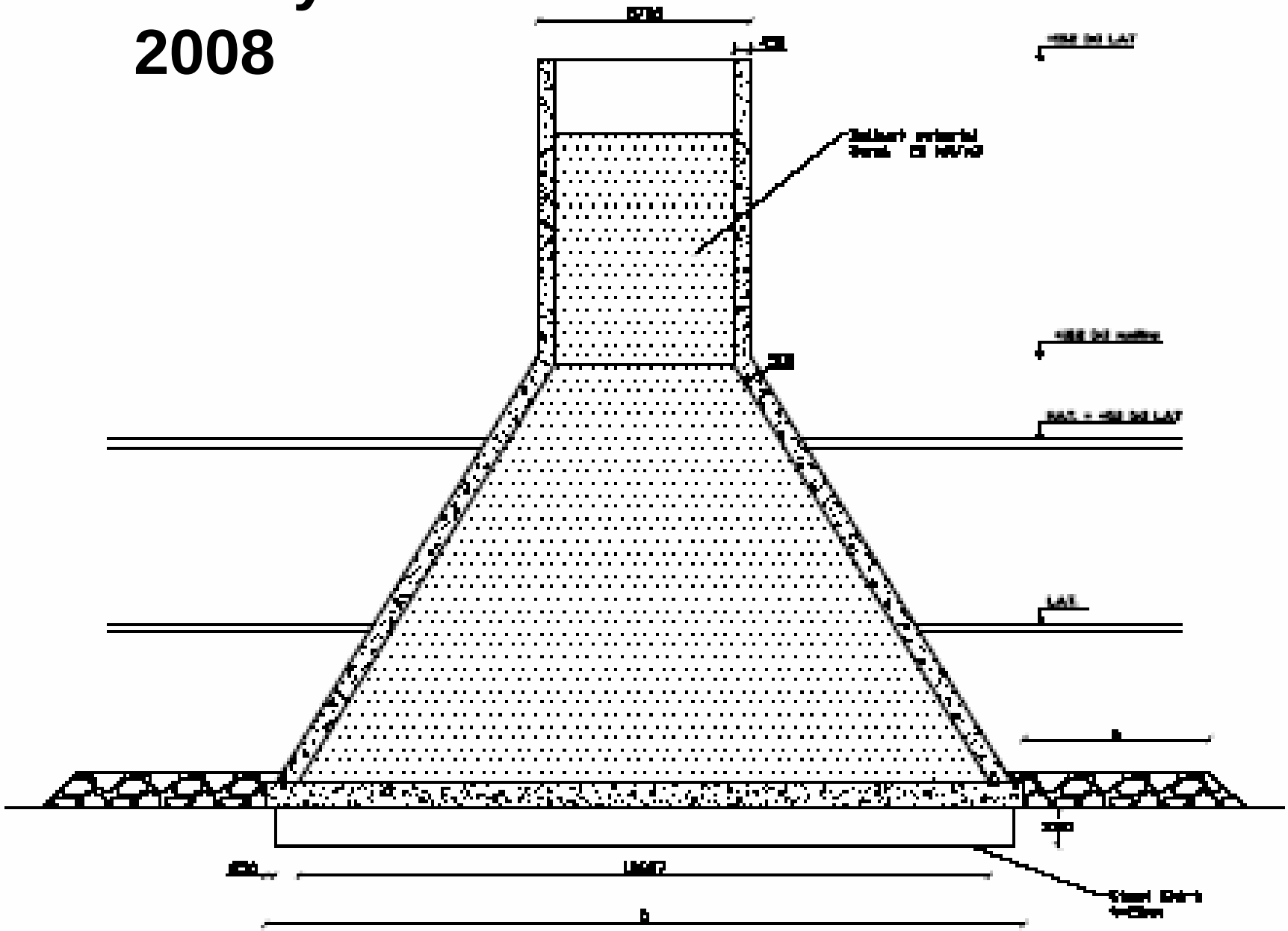

Concrete is Low Cost

Tender Results

Concrete Gravity was tendered against Steel Monopiles for Middelgrunden and Nysted.

Concrete was distinctly Cheaper

Concrete Structure at Half Cost

3.6 MW turbine for London Array West	Weight (ton)	Unit Cost (Euro/kg)	Construction Cost (m.Euro)
Steel Monopile	400	1.5	**0.6**
Concrete Gravity	1500	0.2	**0.3**

Costs for Concrete Constructions are Half the Costs for Steel Monopiles

Concrete is Cheaper than Steel

(m.Euro)	Steel Monopile	Concrete Gravity
Structure	0.6	0.3
Installation	0.4	0.4
Other	0.3	0.3
Total	**1.3**	**1.0**

Costs for Concrete are 20% lower than Costs for Steel Monopiles

Installation of Concrete Gravity

Installation
Concrete vs. Steel

A2SEA install Concrete Gravity

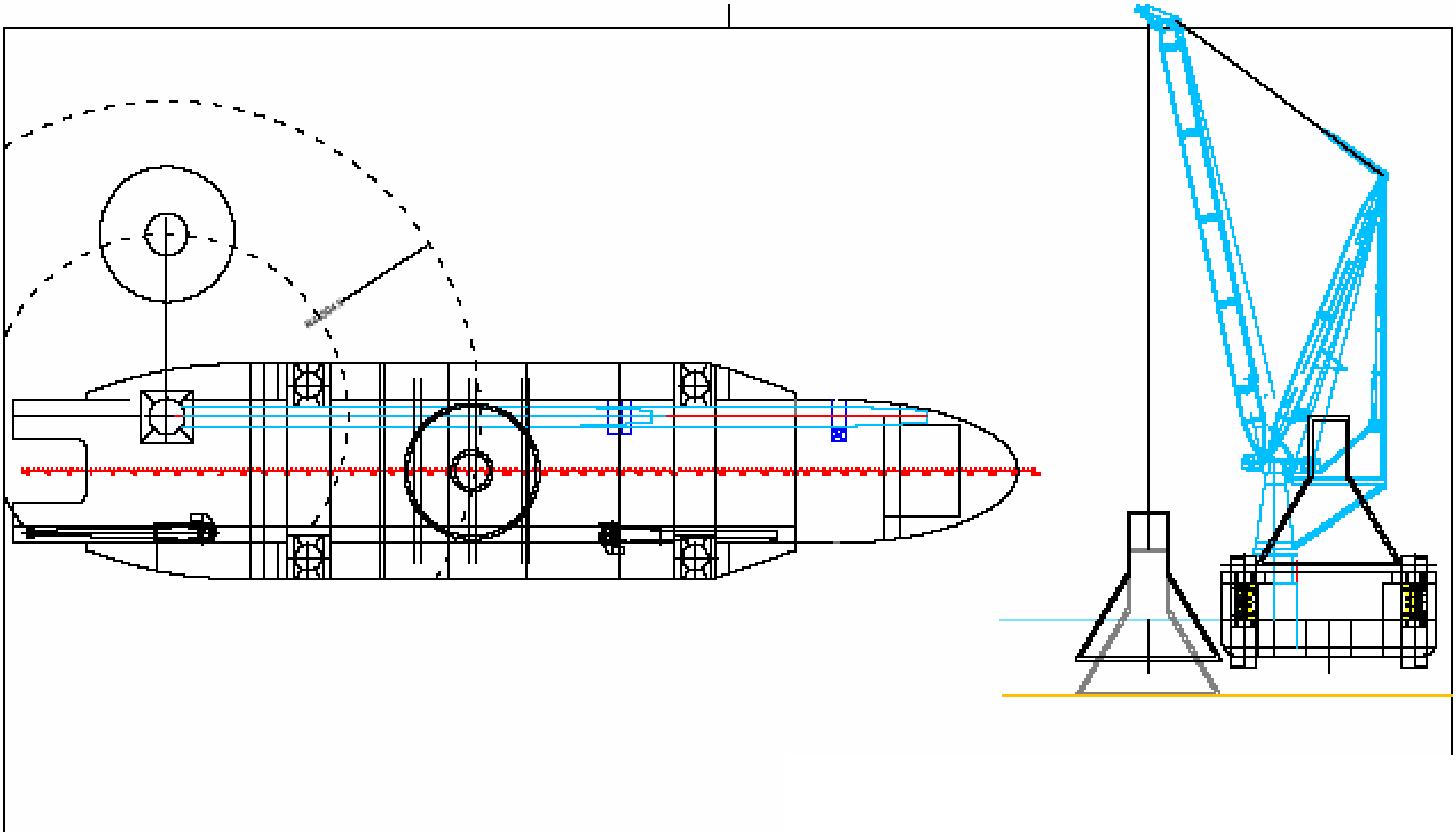

Tacklift 4, SMIT, install Concrete Gravity

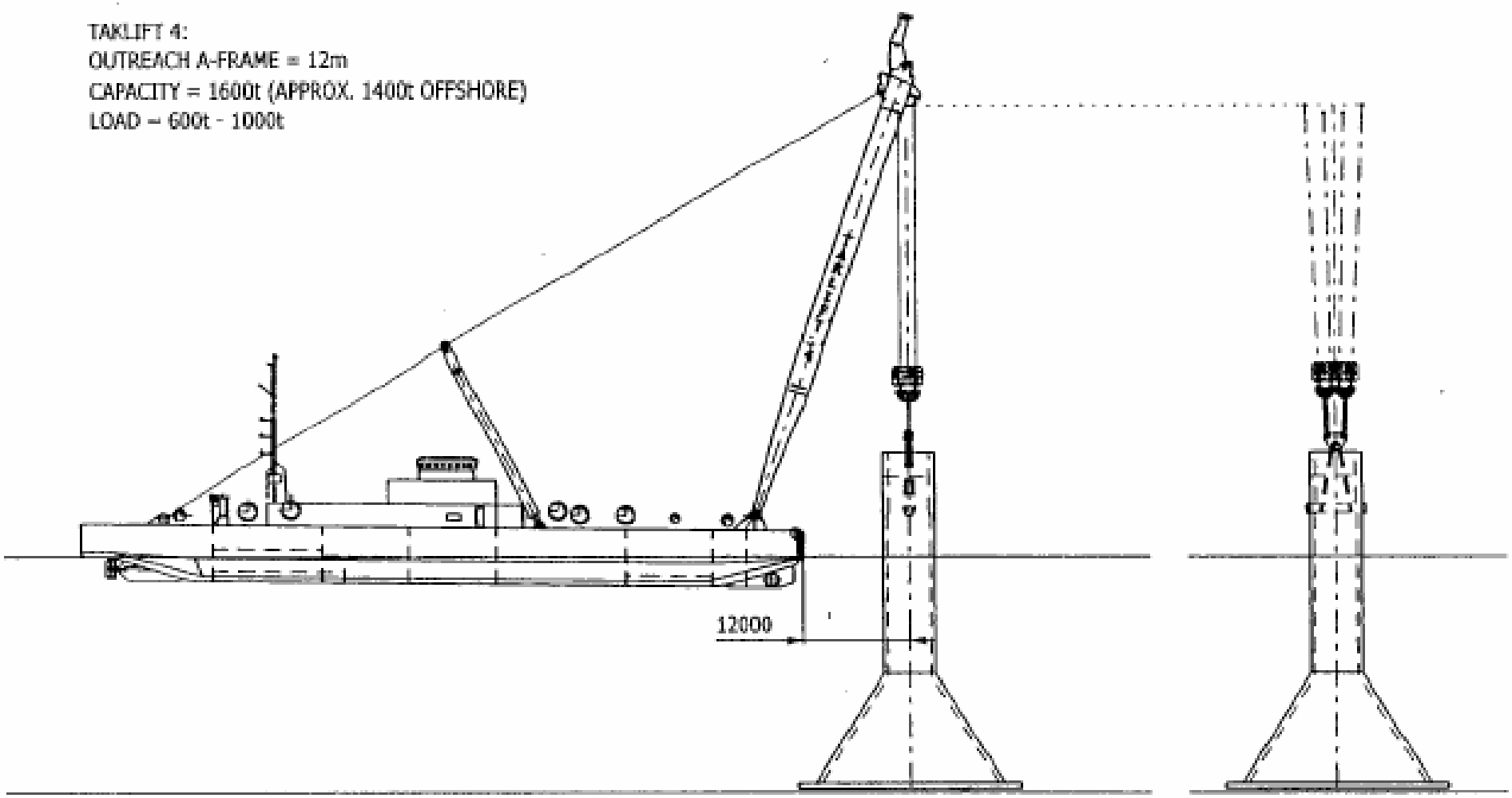

PLACING CONCRETE GRAVITY BASE ON THE SEA BOTTOM

Concrete - Installation

<u>Vessels for London Array West</u>

- Eide Barge 5 (1800 ton)
- Tacklift 4 (1650 ton)
- A2SEA (1800 ton)
- Purpose made flat top barge (???)
- Other vessels…

Installation Risk Reduction

Careful installation:

- Installation in fair weather only (H_s<1m)
- Limit diving – skirt solution
- Avoid sea bed preparation – skirt solution
- Project Programme with
  - time for bad weather
  - time for trouble solving
  - time between different contractors tasks

Risk Reduction by sufficient time for installation

Weather at LAW

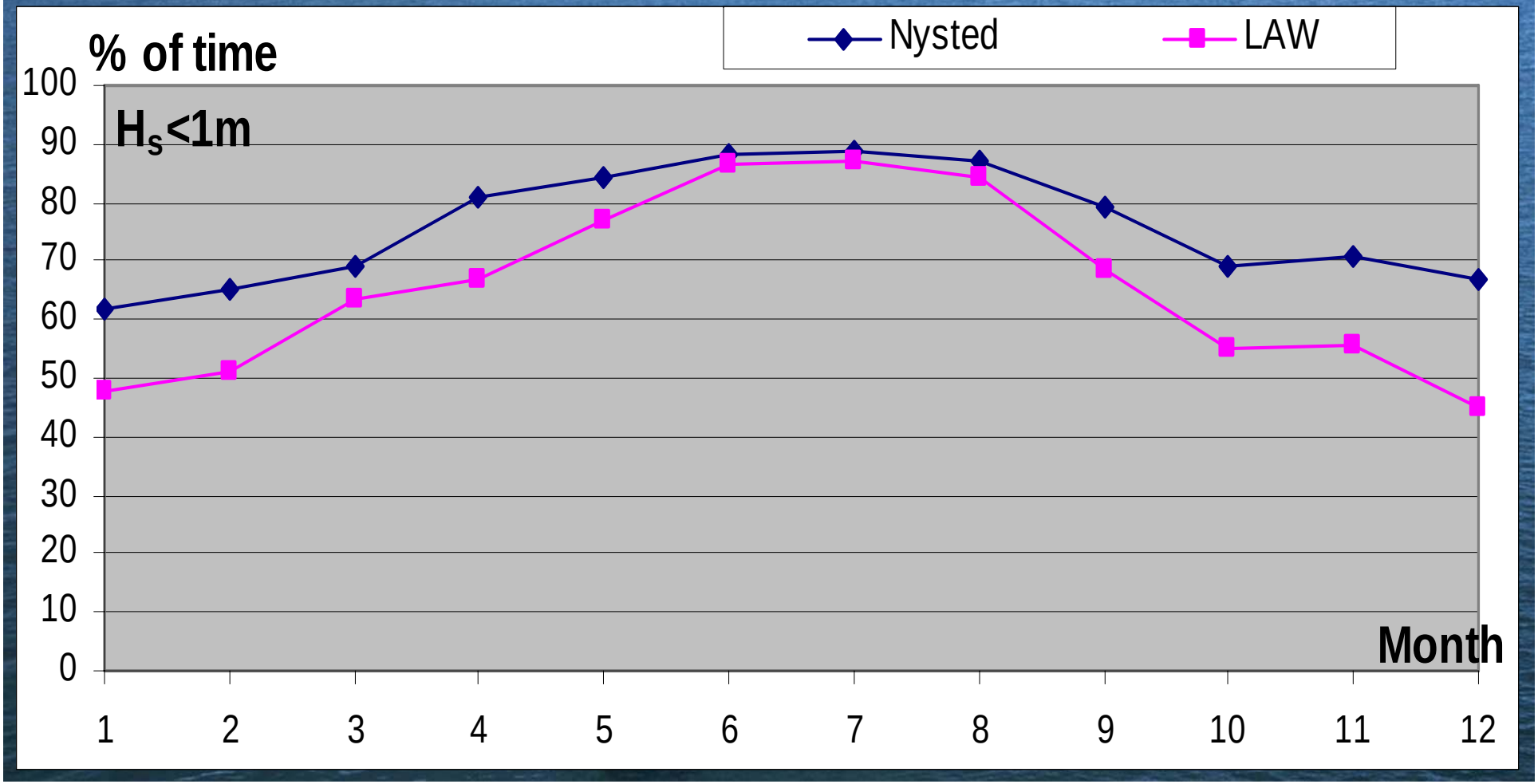

Weather Risk as for Monopiles

Gravity Installation:

- 6-24 hours per installation at Nysted (H_s<0.8 m)

Gravity and Steel Installation:

- 24 hours per installation at LAW
  => 90 working days for 90 installations
- 180 days of summer-season at London Array
- Weather downtime: 25%=45 days
- Contingency: 25%=45 days

Solution Phocus

E2's Conceptual Study:

- Limits weight of concrete structure
- Skirt reduces sea bed preparation
- Scour protection against global erosion
- Turbine-Interface extra slope-tolerance
- Severe sea-bed-slope corrected for in construction
- Soft-soil design (Fi=30º) – olivin-ballast
- Concrete stiff and Natural Freq. High
- Crack Width Criteria released by study

Fair solutions to all identifyed problem

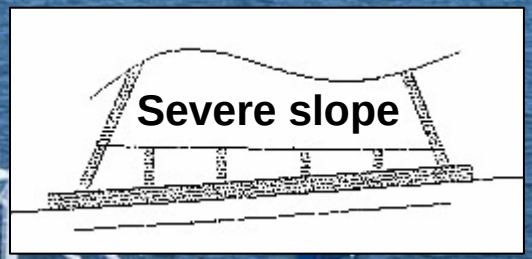

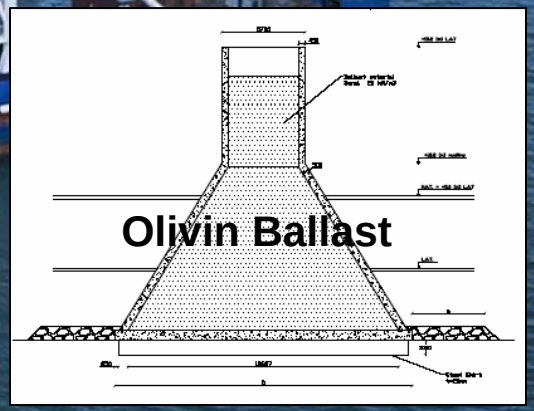

Use the Nysted Concept

Nysted has the cheapest foundations so far.

Concept can be used again:

- Manufacture on flat-top-barges far from site
- Installation with simple lifting vessel, using plenty of time

Changes:

- Skirted solution limits sea bed preparation
- Conical structure ballasted inside

Concrete is the Future

Per Vølund, Energi E2

Conclusions

- Concrete Gravity is potentially cost effective compared to steel monopiles

- E2 needs foundations for London Array West and for Horns Rev 2 in 2008 – suited for concrete

- **E2 needs Marine Concrete Contractors with Solution Phocus – not Problem Phocus**

CONCRETE IS THE FUTURE

E2’s working method 1

<u>E2’s Preparation:</u>

- E2 supplies **Site Assesment** with Geotechnical and Geophysical Investigation
- E2 supplies **Certified Design Basis** incl. wave loads, turbine loads and combined loads

Risk Prevention through E2’s Preparation

E2’s working method 2

<u>E2 involvement in Contractors preparations:</u>

- **Weekly design review meetings** to secure input of E2’s know-how – and limit contract-interface problems
- **No** ”contractors right” to implement **poor solutions**

Risk Prevention through E2’s involvement

EU-supported ”SIWT” Nysted 2006
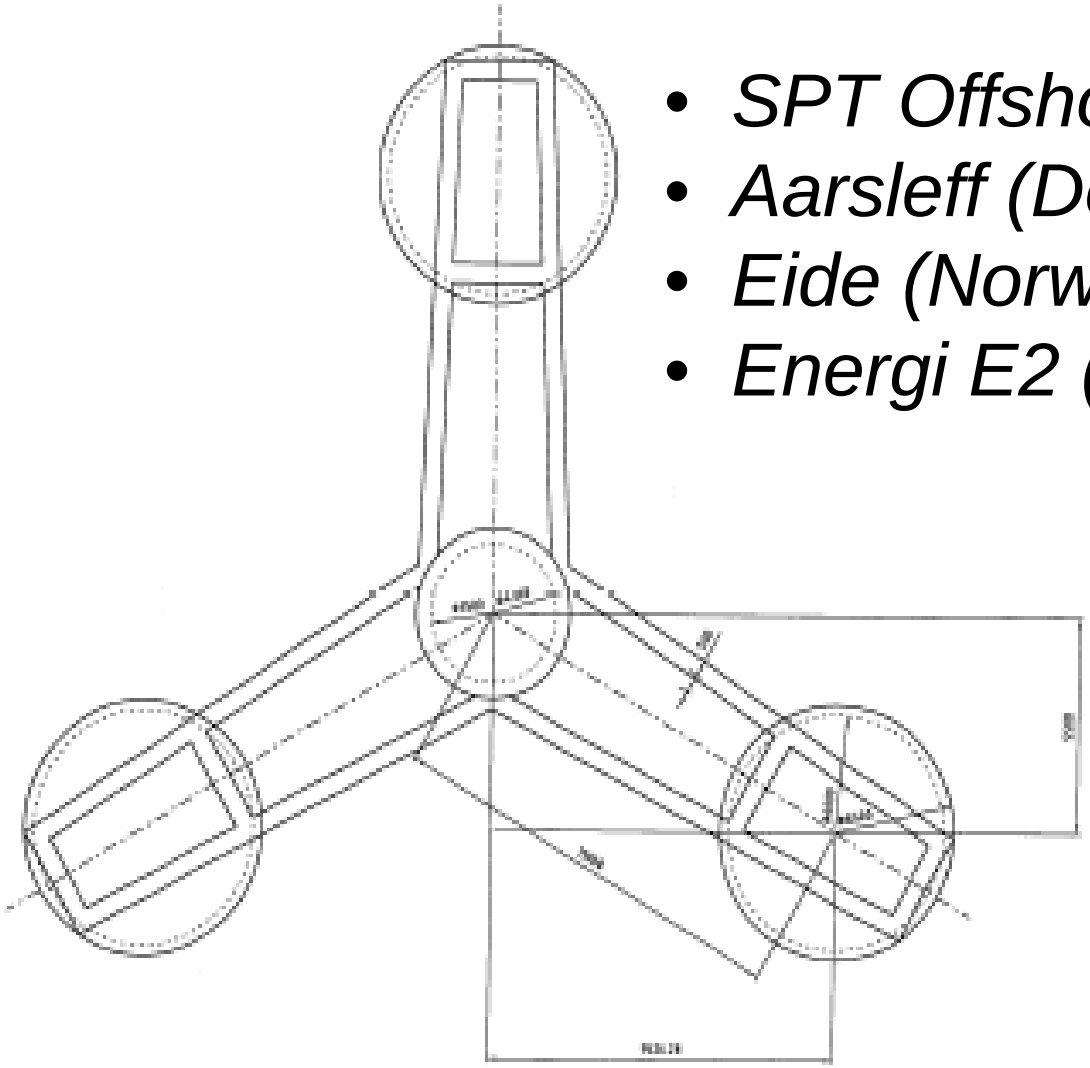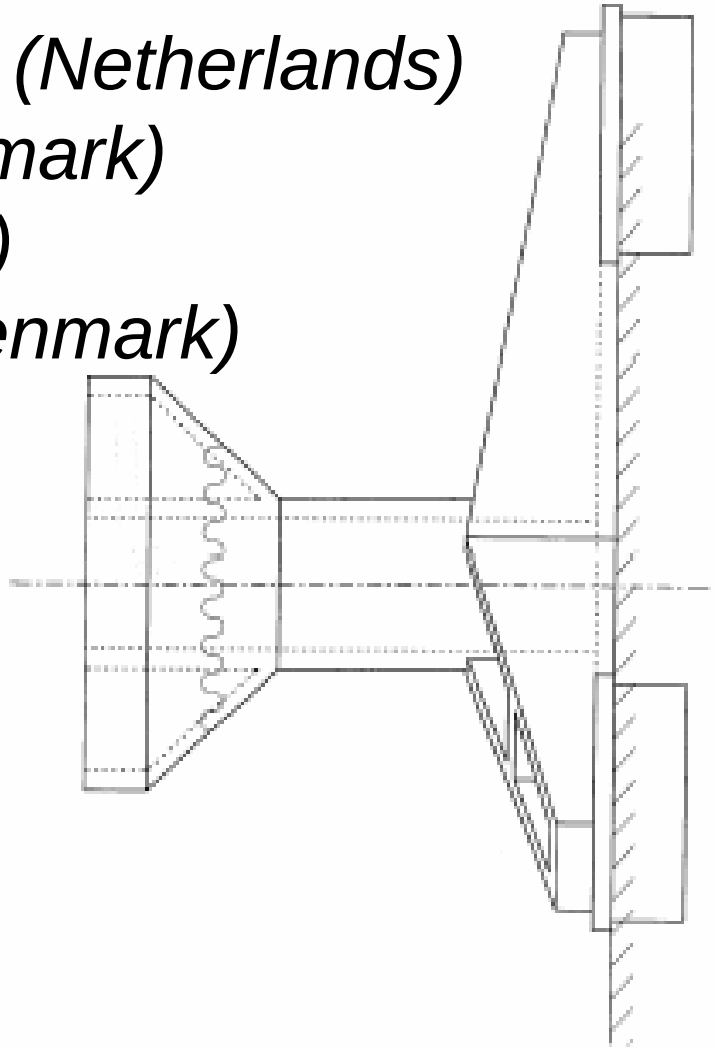
- *SPT Offshore (Netherlands)*
- *Aarsleff (Denmark)*
- *Eide (Norway)*
- *Energi E2 (Denmark)*