Copenhagen Offshore Wind 2005
Topic: Wind Turbine Technology for Offshore Application

Multibody System Simulation of Offshore Wind Turbines

By

Berthold Schlecht, Tobias Schulze, Thomas Hähnel, Thomas Rosenloecher

IMM - Institut für Maschinenelemente und Maschinenkonstruktion
Technische Universität Dresden, Mommsenstrasse 13, D-01062 Dresden
E-Mail: berthold.schlecht@tu-dresden.de
Tel. +49-351-463-33293
Fax +49-351-463-37137

Abstract

As a general problem by the construction and dimensioning of large drive trains in wind turbines, the possible conjunction of drive train and structure natural frequencies emphasizes. Due to the system a complex, elastic and vibratory complete object results under turbulent stochastic input conditions (wind load). This leads to the not new conclusion that it is absolutely necessary to have an exact knowledge of the dynamic behavior of the entire drive system and its surrounding already in the construction phase. However, that requires that for the illustration of the vibratory systems appropriate methods of modeling are used for the individual problem. At first, it seems as if a simple torsional model is enough for the determination of the first torsional natural frequencies, but at the latest when using an elastic MBS-model it can be seen that even this simple mode shape can be overlaid with further mode shapes (e.g. bending of the housing). To reach a complete and significant characterization of the dynamic system it is not enough to do a torsional vibration analysis by large drive trains with elastic elements. Instead, reduced FE-models after the method of the Guyan-reduction or the modally reduction are integrated in the MBS-environment and analyzed as elastic MBS-models.

1 Introduction

In drive trains of wind turbines often occur not only torsional vibrations but also translatory, radial and axial vibrations that have to be considered for the load appropriate dimensioning of the individual drive train components. A lot of the occurring damages, especially gearing and bearing damages can be eliminated already during the development of the product due to the exact knowledge of the dynamic properties and the resulting additional loads. As a solution of this problem the Multi-Body-System-Simulation (MBS) with rotatory and translatory degrees of freedom in the space is presented. The article describes the current state of the modeling possibilities of entire drive systems under consideration of all assemblies, relevant for the vibrational simulation, and the electrical drive train components as well as the control technique. In extension of the torsional vibration analysis all six degrees of freedom of a body are taken into consideration at the MBS. That results in the important advantage that translatory movements and rotations around all axes can be included. By the drive trains that are analyzed, not only the radial and axial movements of the individual shafts inside the gearing can be considered, but also the relative movements between the components of the drive train are reproduced as they would be in reality. Even though the MBS is old, because the general relations of the rigid body mechanic form the basic principles, high-capacity computers are needed, due to the sixfold number of degrees of freedom [1]. Up to this day main fields of application are space technology as well as street and rail vehicle construction. Basically, this method provides great

advantages for the analysis of systems with large relative movements (nonlinearity) [2]. The engineers interest in determining the torsional vibrations in drives started with first examinations at the beginning of the last century. With the increasing capacity of the computers the models became more complex. Due to that, meshed systems with up to 50 torsional degrees of freedom could be analyzed numerically without problems at the end of the last century. At the crane construction, especially by cranes for casting, drive train damages have been analyzed with the help of torsional vibration simulations to develop safety concepts to prevent severe accidents [3]. Developing from these experiences, this method of MBS was used for the analysis of drive trains in wind turbines from 600 to 4500 kW, because more and more dynamic problems occurred there that could not be explained with the pure torsional vibration analysis. It could be seen that a balanced level of modeling over all physical domains (mechanic, electro technical, aerodynamic, ...) is needed for realistic simulation results. In that way first entire models of the system wind turbine have been developed that considered all components relevant for vibrations [4].

2 Simulation of Wind Turbines

The fast development of wind turbines should not hide the fact that malfunctions and damages occur often in all elements of the drive train (gearing, coupling, bearing), which were not known or relevant in drive trains of similar sizes in other industrial sectors (for example heavy drive trains for rolling mills). The main reason for that is certainly the fact that the supporting structure of a wind turbine, consisting of tower (height up to 130 meters) and nacelle, is very elastic and in combination with the rotor (diameter up to 120 meters) is an extremely sensitive system for vibrations. Additionally, the entire drive train stands on a foundation, which can be assumed as elastic, even though it is a massive construction. Several constructions demand a stiffness function of the gearing for the main frame additionally. With that, the drive train is not on a stiff foundation (as it is the case with a drive trains for rolling mills or other heavy drive trains for example), but is integrated in an elastic environment. That can lead to interactions between the systems and alternating vibrational stimulations. The fast increase of this branch in the last years is also a problem, because neither extensive operational experiences with the particular turbine sizes could be gathered nor enough expertise, especially in the area of the drive train, exists with the big components that are used today. Aggravating can be added that some manufacturers of turbines are slow to accept that next to rotor, tower and pitch controller the drive train belongs to the main components of a turbine, which includes a relevant responsibility for this assembly. The momentarily common wind load calculation tools, which are used by all turbine manufacturers, use detailed aeroelastic codes for the rotor but work with simple 3-mass torsional oscillators to show the complex vibratory structure “drive train”, figure 1 [5, 6]. In the frequency range often only the lowest torsional natural frequency of the drive train is taken into consideration, further details are excluded [7, 8].

This still practiced praxis is hard to understand, especially with the connection to the many damages in the drive train. A very good wind turbine is determined not only by an optimal rotor, but also when all other mechanic and electric components are adjusted optimally to each other. Since a couple of years simulation techniques are used in other branches of mechanical engineering, plant engineering and vehicle construction that consider the mechanic, electric, control technique and the particularities of the to controlling processes for the entire adjustment already in the construction phase of such a complex complete system [9]. From a great number of projects and studies with well-known turbine manufacturers and their suppliers in the last three years it can be clearly concluded that wind load calculation tools will also be needed in future. Indeed, for the equal handling of all used components with the individual detailed level additional efforts are needed, especially by the dynamic analysis of the drive train.

In the case of the following drive train the modeled torsional vibration model was extended by essential translatory degrees of freedom in axial direction. In the next step a main frame, discretized in four masses, was taken into consideration, Figure 2.

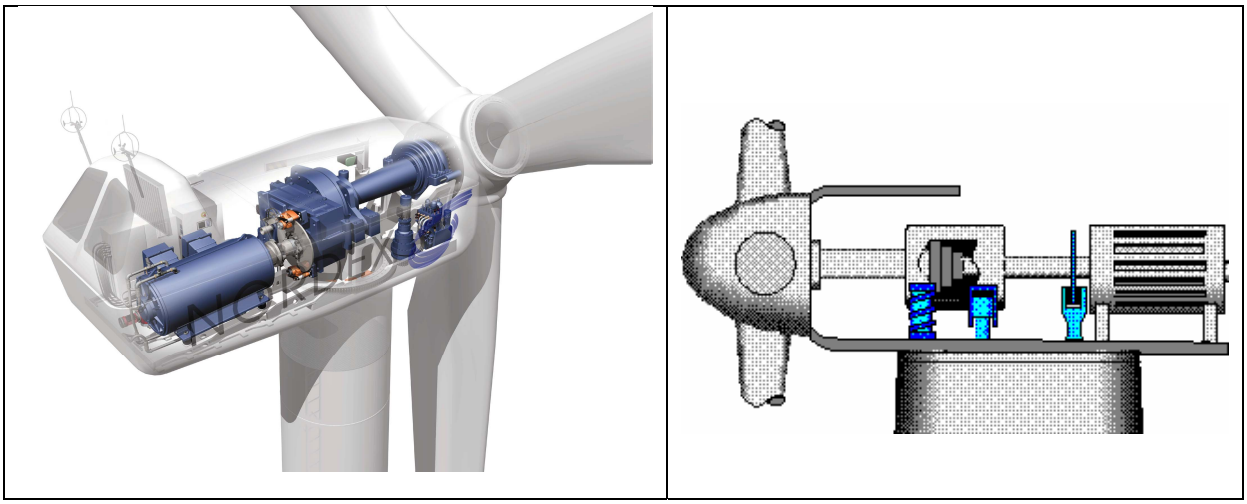

Figure 1: Modern multi-megawatt-wind energy turbines and 3-mass torsional vibration model of a wind load calculation tools

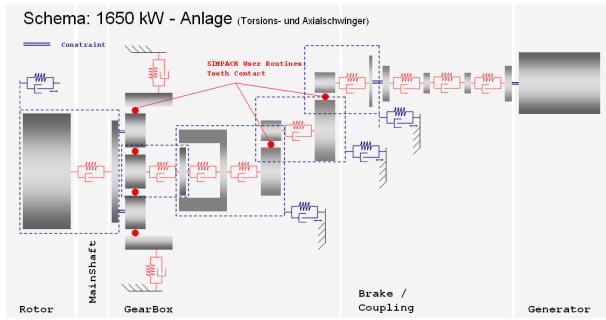

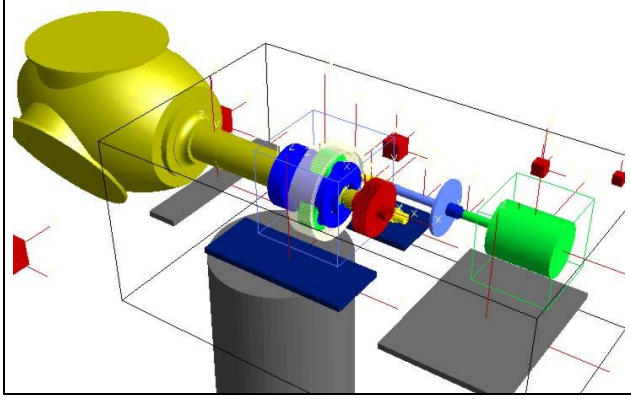

Nr.	MBS with m-frame [Hz]	Torsion and axial [Hz]	Torsion [Hz]
01/02	0.00	0.00	0.00
03/04	1.19	---	---
05/06	2.12	2.53	2.53
07/08	14.17	---	---
09/10	27.62	32.72	33.01
11/12	45.42	---	---
13/14	61.59	---	---
15/16	72.20	76.73	80.65
17/18	81.03	89.45	---
19/20	90.05	115.34	---
21/22	91.80	---	---
23/24	92.41	---	---
25/26	110.47	---	---
27/28	110.63	---	---
29/30	125.51	126.51	147.98
31/32	126.84	---	---
33/34	159.74	154.55	---
35/36	167.47	---	---
37/38	196.50	---	---
39/40	217.57	224.51	---

Figure 2: Multibody simulation model of the drive train and natural frequencies

It can be seen that even a detailed torsional vibration analysis that lies far over the model degree of three torsional masses of a wind load calculation tools with its 19 torsional masses is not good enough to characterize the occurring vibrational phenomenons of a wind turbine entirely. Just from the consideration of the low natural frequencies it is clear that the drive train is not only stimulated by the torsional natural frequencies, but rather a lot of low frequent natural modes in the form of axial vibrations and bending vibrations from the main frame (1.19 and 14.17 Hz) exist. This phenomenon results in radial movements between generator and coupling with gearing. These frequencies are easy

to stimulate and give a very good explanation for consistently occurring coupling damages and malfunctions of the A-bearings in the generators. The largest overview to the dynamic characters gives the version with consideration of the main frame. Furthermore, such a model can be extended with rotor blades and tower structure including coupling between tower and main frame. With the resulting model conclusions for the entire system can be given. Further possibilities of stimulation for the drive train result from the tooth excitation frequencies in the individual gears. Because of the system, it is possible, that the tooth excitation frequency of the second gear stage stimulates the axial natural frequency (translatory movement of the shaft in the second gear) with a rotational speed of ca. 28 min^{-1}, Figure 3.

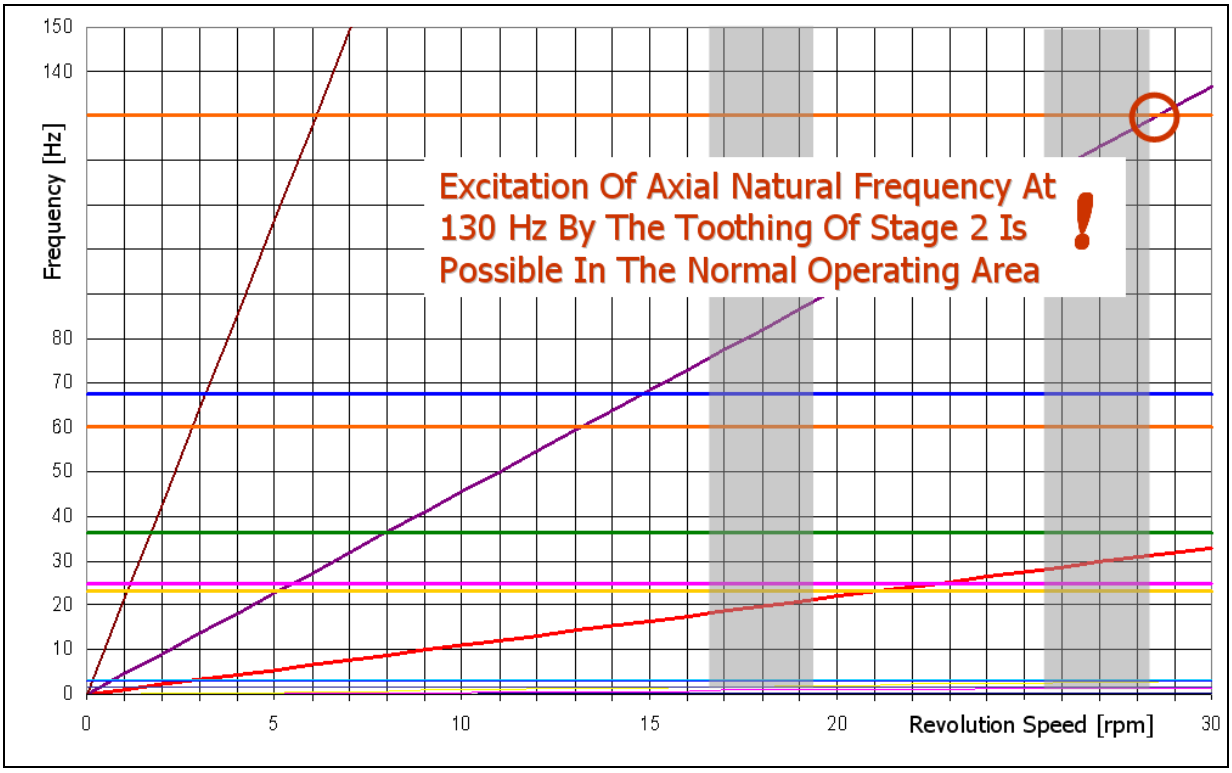

Figure 3: Campbell-diagram for the stimulation of natural frequencies

This behaviour can easily be found for example at torque measurements in the drive train, because frequencies are in the signal that can not be explained with a torsional vibration analysis. The result is that a “simple” torsional vibration analysis is not enough for an extensive evaluation of the vibrational behaviour of a drive train in a wind turbine. By the way, the occurrence of translatory natural frequencies between 120 and 160 Hz in the area of the helical geared intermediate stage is not only restricted to the gearing shown here. Gearings of higher power classes with one or more planetary stages show these translatory natural frequencies independent of the manufacturers, also. That often results in bearing damages on the floating bearings that can be compared to damages due to overloading. Eventually, damages can be prevented by a preloaded bearing of this intermediate shaft. Another problem results from the increasing size of the turbines. Larger masses resp. inertias and less stiffness lead to decreasing natural frequencies of the drive train. Due to that, these natural frequencies are shifted in the range of structural natural frequencies of rotor, tower and nacelle, Figure 4. The resulting mixture of the natural frequencies is another reason to determine all natural frequencies of the system in rotatory and translatory direction to prevent not wanted stimulations of the needed operating state.

3 Extension of the Multibody-System-Model

For the simulational handling of wind turbines with powers over 1 MW the modeling of planetary gearings is necessary. Figure 4 shows the extension of a spur gear by a planetary gear stage. The entire mechanical drive train model also includes coupling, brake and generator.

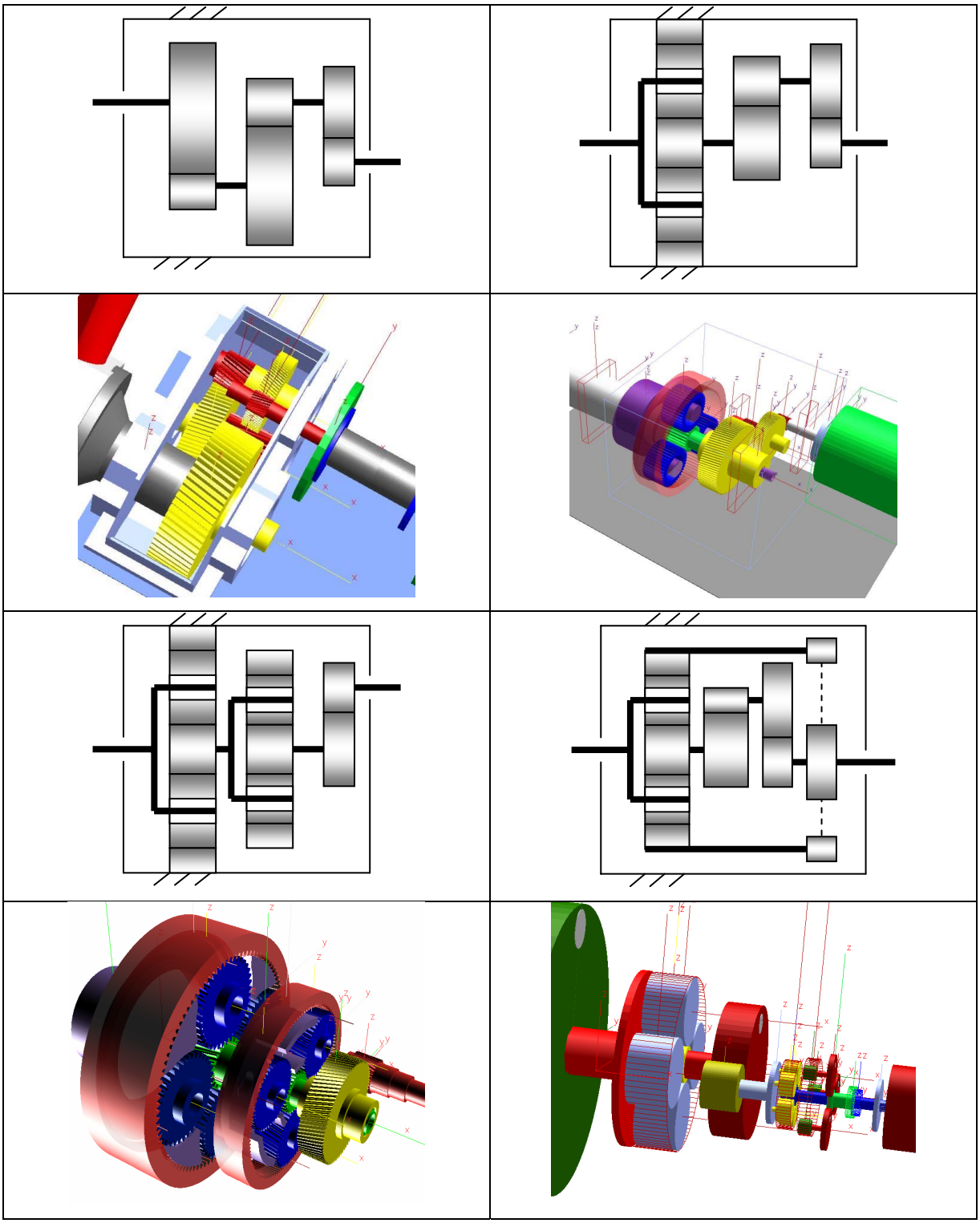

Figure 4: Gearing concept – three staged spur gear and single staged planetary gear with two spur gear steps, multi staged planetary gearing and speed controlled overriding drive

The gear housing is elastically supported over the torque arm to the nacelle. The generator housing is also connected to the nacelle over vibrational elements. The 5-MW-turbines, that are being developed right now, have even larger gearings with two consecutive planetary gear stages. The left side of figure 6 shows the modeled gearing of such a turbine. On the right side an overriding drive with variable gear ratio is shown. This concept WinDrive®, developed by the firm Voith, is a hydrodynamic and speed controlled gearing that allows the operation of a synchronal generator with constant rotational speed at the generator shaft, independent from the rotational speed variations at the rotor shaft that depend on the wind [10].

The first calculation models were calculated only with the rotor hub, but which contained the inertias of the rotor blades also. Now, in most cases a detailed modeling of the rotor is done according to figure 5. In terms of the complete modeling of the MBS the development of the model with stiff bodies and massless stiffness between the masses is favored. Alternatively, FEM-structures can be included resp. often the MBS-rotor model is derived from eventually existing FE-models. Such a modeling covers all relevant natural frequencies and mode shapes in the low frequency range, that have an important influence on the vibrational behaviour of the drive train [11, 12].

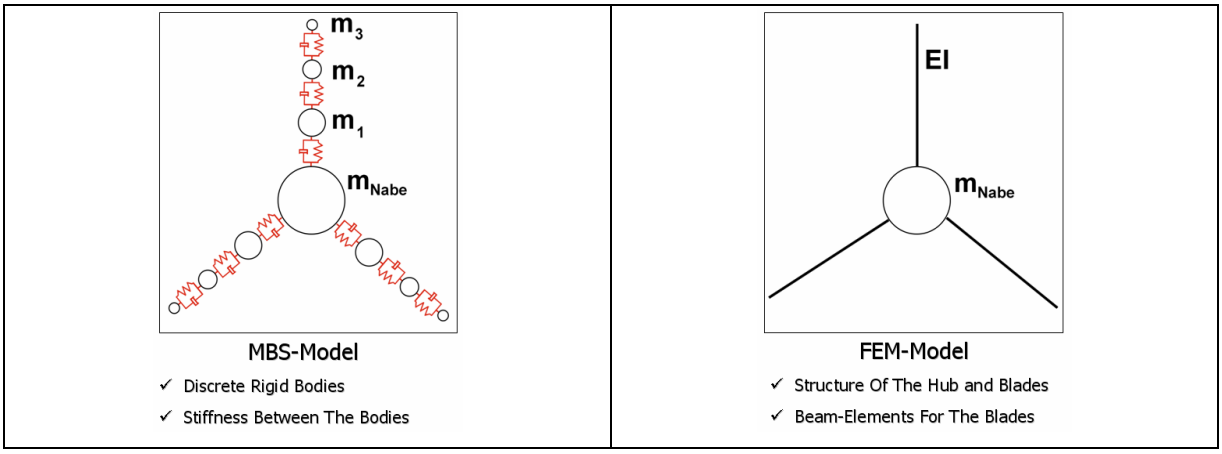

Figure 5: Rotor modeling mechanically

With an increasing level of detail of the drive train the connection of the drive train to the nacelle comes into the focus of attention inevitably. Such a completely established mechanical model of a wind turbine, consisting of a detailed drive train, rotor with rotor blades, nacelle and tower structure, is shown in figure 6. As already mentioned at the beginning the drive train of a wind turbine is not seated on a stiff foundation. Due to the system only a relatively soft nacelle structure can be provided, furthermore this structure is connected to a steel tower, with the possibility of vibration. The drive train is subject to partly very strong deformations on its crosspoints with the nacelle, because of this construction. These deformations can have a significant influence on the operating behaviour of the drive train. Even though all manufacturers try to get a stiff nacelle construction, especially in the area of the main rotor bearing to the connection on the azimuth bearing, the entire stiffness of the structure is relatively soft compared to the drive train. Figure 7 shows a possible discretization of a base frame in the shape of one mass for the assimilation of the main bearing, two masses for the connection of the torque arm and one mass for the assimilation of the generator (upper example) resp. a reduced FEM-model (lower example). The yellow markings (cuboid) represent the so called „Master Degrees of Freedom“ (equivalent: crosspoints to neighboring structures). Additionally, the torque arm of the gearing can be seen (in red). The connecting stiffness between these masses are gained in the same way like a FEM-calculation of the structure. On such a model all relevant natural frequencies with the belonging mode shapes can be determined. At this point it becomes clear once more, that an entire MBS-model needs a multitude of inputs and parameters, that can partly be determined only from complex calculations, like a FEM-analysis of a nacelle structure of a rotor or of a gear housing.

Closing, it can be summarized to the calculation of natural frequencies that the basic problem in the entire technical literature to wind turbines is discussed only in view of the lowest torsional natural frequency and its satisfactory distance to tower bending frequencies. However, this is not enough to explain the current dynamic problems in large drive trains.

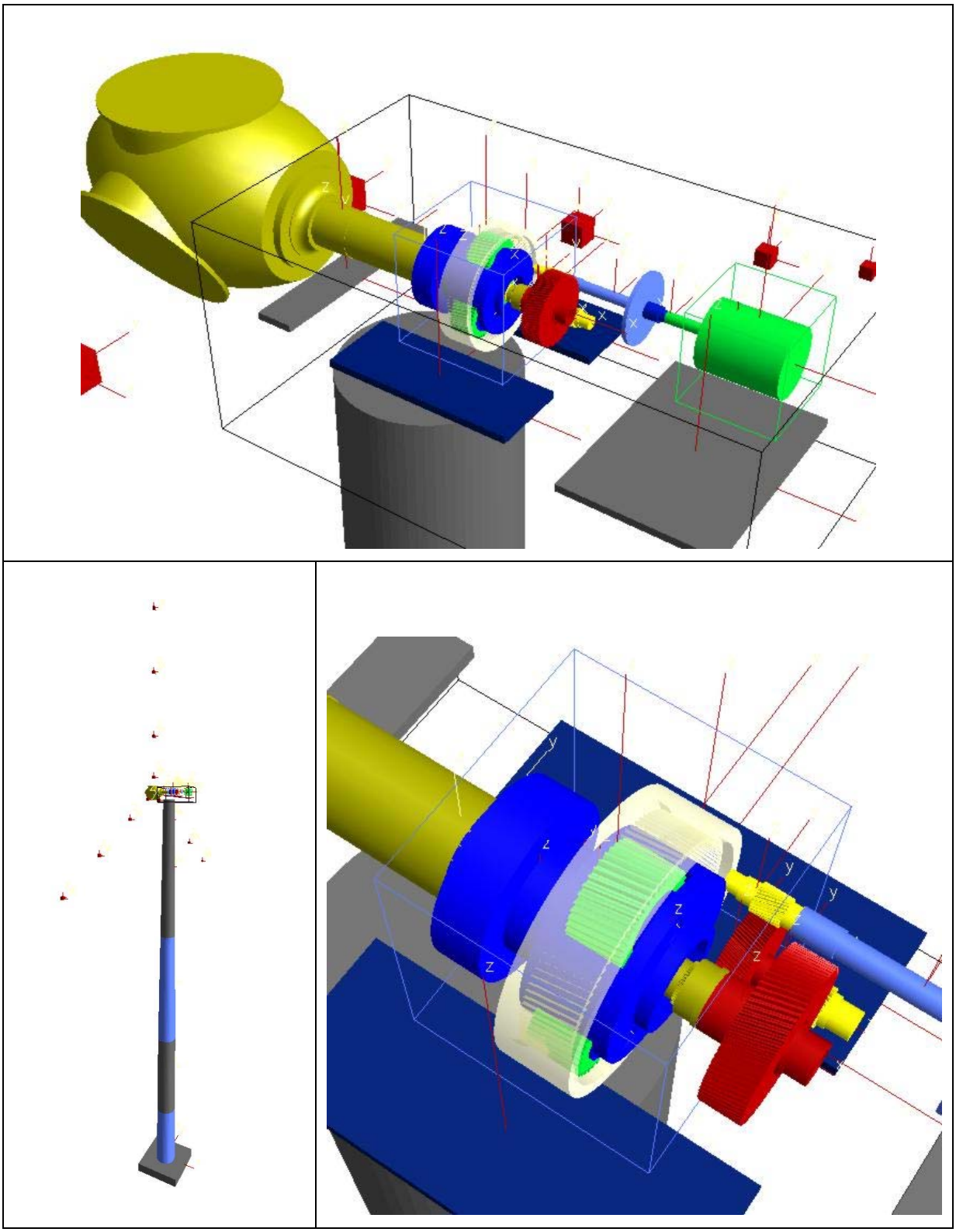

Figure 6: Entire model of a Wind Turbine

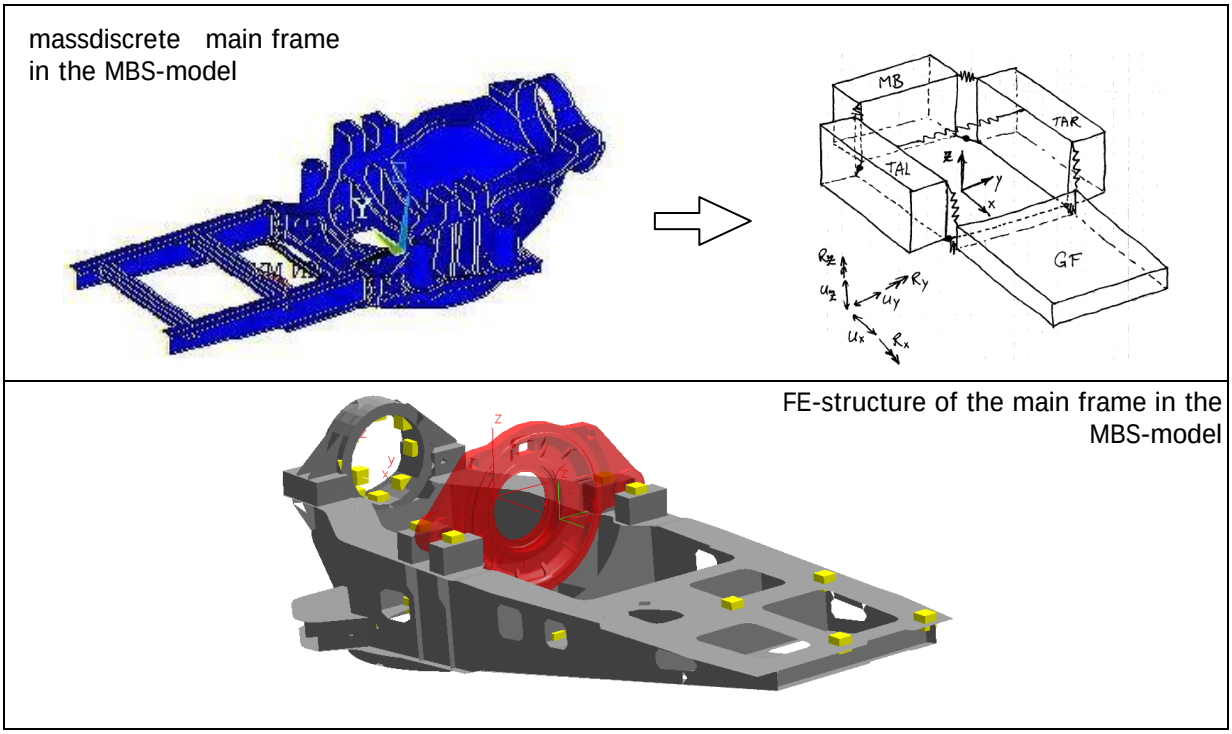

Figure 7: Extension of the MBS-model with nacelle and tower

4 Wind Loads, Electrical Engineering and Control

With the mechanical models, shown in this chapter, all analysises of natural frequencies can be made. For the examination of the dynamic behaviour in the time range additional stimulations of the mechanic system are needed. A wind turbine mainly varies with the following external loads:

- Wind loads on the rotor and the structure
- Repercussions from the power system on the converter and the generator

Dynamic loads that result from the system management of the turbine and the used control are added. When firstly considering the load due to wind only the loads acting on the rotor are converted into energy for the most part. Wind loads on the tower or the waves on the root point of an off-shore-turbine are additional disturbances that won't be further discussed at this point. Also the wind load on the rotor is not entirely converted in a torque useable for the generation of energy, because bending torques and forces in all three dimensions occur additionally, which lead to additional loads in the entire turbine. Figure 8 shows schematically the usual procedure how a torque, acting on the drive train, can be determined from a given three dimensional wind field with the help of a wind load simulation program. A disadvantage of this procedure is the missing repercussion between the induced drive train vibrations and the resulting influences on the wind-torque-convertion over the rotor blade profiles. Besides, a wind load simulation program is needed at any rate in which the drive train is included as a 3-mass torsional oscillator. Consequently, in such a consideration the drive train exists "twice" and the determined torque acts reactionless on the drive train.

A relatively simple method with repercussion for the calculation of the torque from the acting wind supply is shown in figure 9. A torque with repercussion is determined from a measured or synthetically determined one-dimensional wind-time-course, using the c_p-curve and the current pitch angle of the rotor. On the other side of the drive train the air gap moment of the generator and the

frequency converter take place against the state of the power system. Simpler and more complex detailed models could also be used here for a realistic illustration:

- Illustration of the air gap moment with the Kloss formula of the asynchronous machine M = f(s)
- Specification of the moment curve s by the converter characteristic M = f(n), e.g. at the twice-fed asynchronous machine
- Exact specification of the electric system by a complex converter-generator model in Matlab / Simulink

Similar to the level of detail of the mechanic system in the electric part the effort to prepare the data and to parametrize is increasing with an increasing level of detail. Depending on the load case an illustration of the electric parts with characteristic curves is often enough. When the effects of short-circuits or unsteadinesses of the grid have to be considered, the more complex models have to be used at any rate [10].

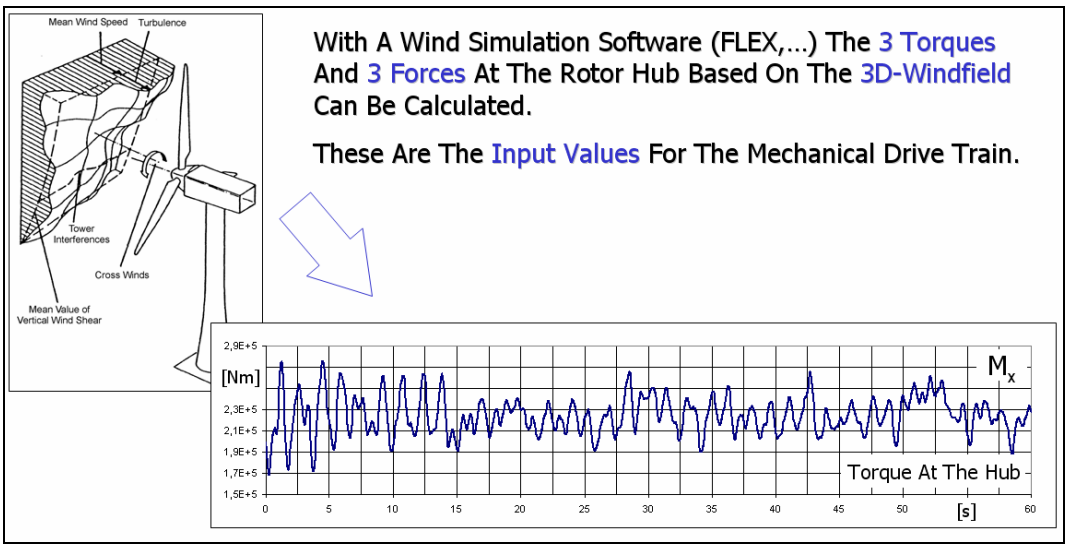

Figure 8: Determination of the torque with wind load simulation program

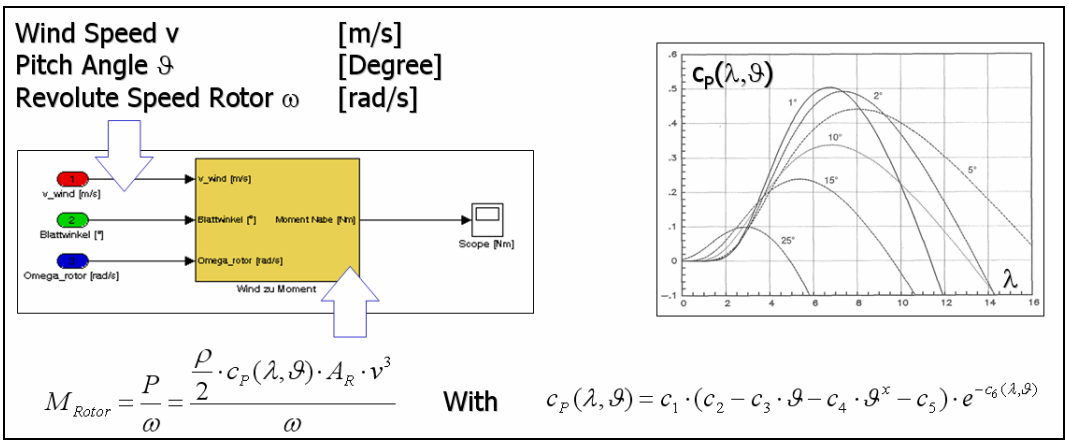

$$M_{Rotor} = \frac{P}{\omega} = \frac{\frac{\rho}{2} \cdot c_P(\lambda,\vartheta) \cdot A_R \cdot v^3}{\omega} \quad \text{With} \quad c_P(\lambda,\vartheta) = c_1 \cdot (c_2 - c_3 \cdot \vartheta - c_4 \cdot \vartheta^x - c_5) \cdot e^{-c_6(\lambda,\vartheta)}$$

Figure 9: Determination of the torque from analytic c_p-curve

Depending on the level of modeling the frame of examinations can be considered narrower or wider by setting the borders of the system. The simulation model, that has to be examined, is separated from the surrounding by the border of the system. Due to that, the determination of the border of the system and the resulting separation in inside and outside system parameters has an important impact on the complexity of the model. The outside system parameters are referred to as input data that act

unaffected by the system. Due to these parameters inside of the border of the system the according system response are reached for the interdependent state variables.

For the completion of the electro-mechanic simulation model a control is needed. As it can be seen in figure 10 this control includes the pitch controller as well as the control of power and rotational speed.

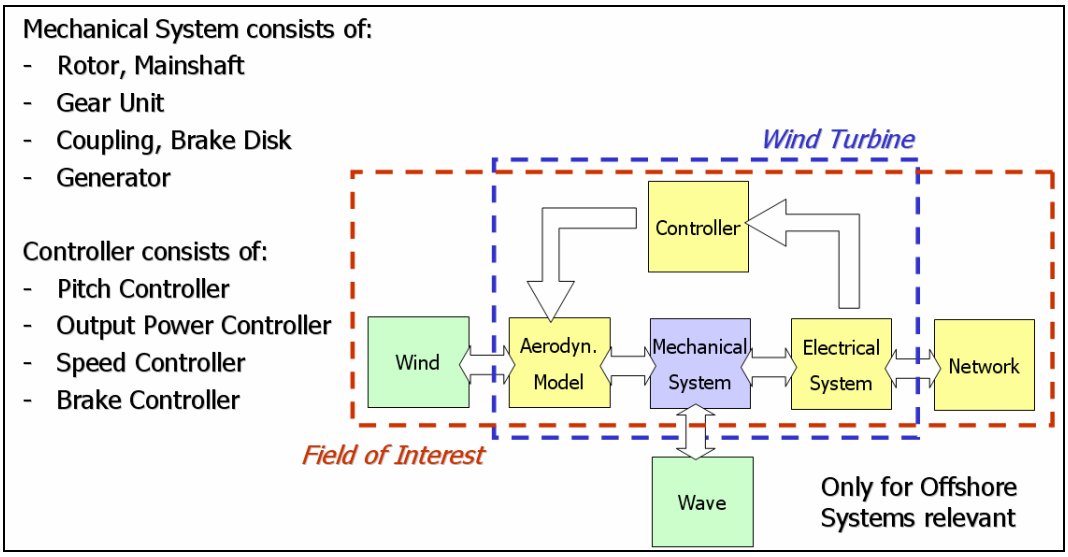

Figure 10: Control and border of the system

5 Exemplary Simulation Results

On the basis of the described model more complex states can be reproduced and simulated in the time range. This is of great interest when the considered event happens very seldom (e.g. 20-year-gust) or with extreme loads on the individual machine elements (e.g. “Crowbar-Event”), figure 11.

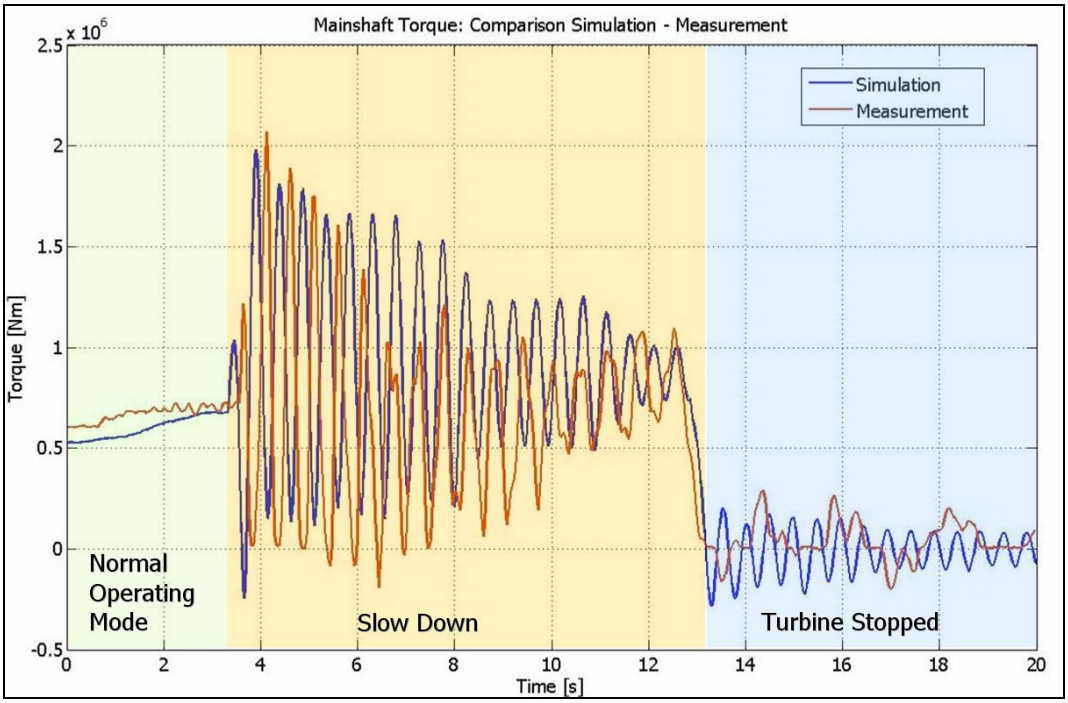

Figure 11: Comparison of simulation and measurement „Crowbar-Event“

By the so called “Crowbar-Event” the generator blocks at first, then the generator is taken from the grid as fast as possible and after that the mechanic brake is applied and stops the turbine with the emergency breakpoint. The diagram shows the torque in the main shaft of a wind turbine determined by a simulational calculation (Co-simulation of Simpack with Matlab/Simulink) (blue graph) and the data of a measurement recorded for this loading case (red graph). The existing deviation during the shut down of the turbine mainly results from not considering the changing pitch angle when shut down. Furthermore it can be seen that no clearance in the drive train is intended in the simulation model when the already standing turbine is oscillating out. However, with such a simplified simulation model a very good prediction model for such extreme load cases is established, which can be extended at the needs of the pitch angle and the gearing and bearing clearances.

A further simulation result of a wind turbine for a synthetic gust according to the German Lloyd Guidelines is shown in the following figure 12. Starting from the wind speed (upper graph) the main shaft torque and the output power are determined (the two middle graphs) for both simulators (Simpack with Matlab/Simulink vs. Flex). Conclusions to axial movements resp. bearing forces can only be analysed with the MBS-program. For instance, the axial bearing force of the thrust bearing on the first intermediate shaft (IMS) in the gearing is shown here (lower graph). With the described simulation models the synthetic loading cases can also be calculated with the definition of the German Lloyd (GL) or the AGMA6006. The following diagram shows the loading case “emergency stop” with acting of the mechanic brake by a synthetic gust after GL.

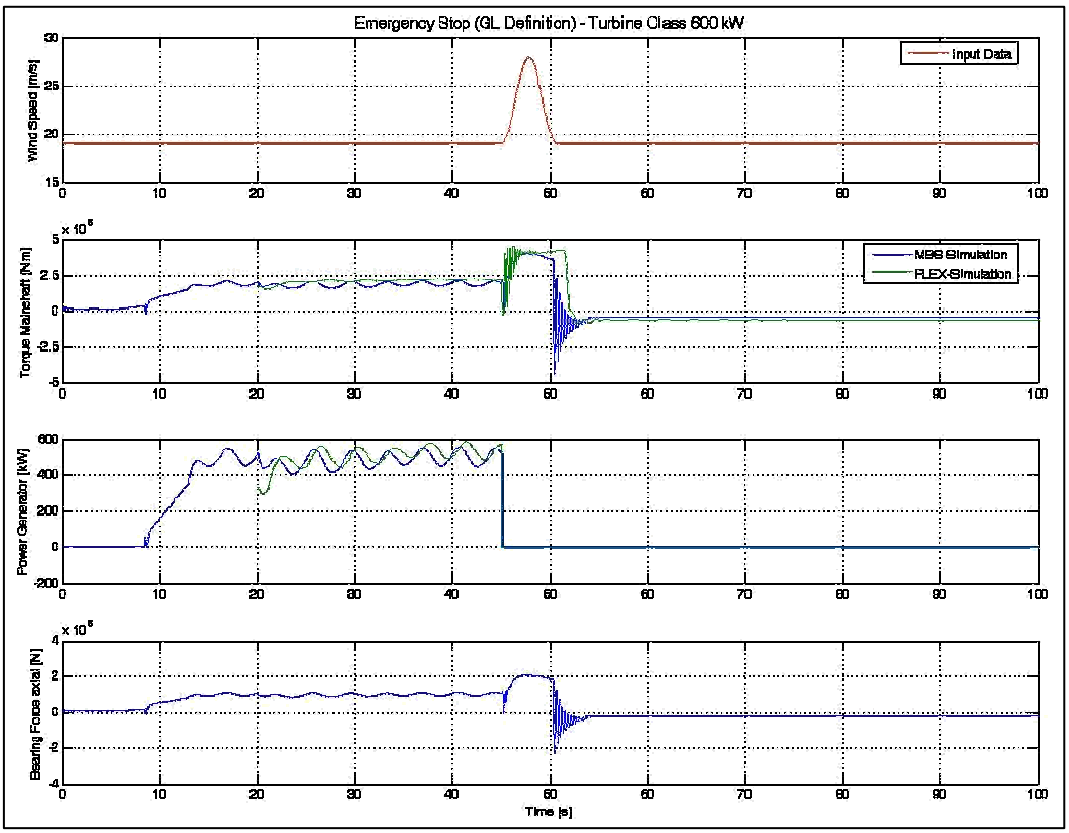

Figure 12: Loading case “emergency stop“

In the illustration of the torques it can be seen where the limit of the wind load simulators (here: Flex) is. In the main shaft torque (second graph) the oscillation of the drive train equal to comparative measurements is missing in the Flex-calculation. The reason for that is the absence of a sufficient model of the drive train. Also in this case, the wind load simulation program can’t make a statement to the inside axial forces here. These examples show the importance of the realization of a balanced entire model for the simulation. In the case of the dynamic model of a wind turbine it is definitely not

the commonly used torsional vibration model. Significant results can only be reached with a mechanic model, reproduced in detail, under consideration of aerodynamic, electric and controlled boundary conditions.

6 Summary and Outlook

Large Wind Turbines are complex, elastic and vibratory systems under turbulent stochastic input conditions (wind load). For a load adequate dimensioning it is absolutely necessary to have an exact knowledge of the dynamic behavior of the entire drive system and its surrounding already in the construction phase. At first, it seems as if a simple torsional model is enough for the determination of the first torsional natural frequencies, but at the latest when using an elastic MBS-model it can be seen that even this simple mode shape can be overlaid with further mode shapes (e.g. bending of the housing). To reach a complete and significant characterization of the dynamic system it is not enough to do a torsional vibration analysis by large drive trains with elastic elements. Instead, reduced FE-models after the method of the Guyan-reduction or the modally reduction are integrated in the MBS-environment and analyzed as elastic MBS-models. In order that the extended and partly complex way of modeling stays in a manageable scope and is industrially usable a unitized model development is aspired. Also in the future the modeling will not entirely be automatized, because the skilled eye of the experienced engineer is needed to distinguish between stiff and elastic structure, between bodies with mass and decisive stiffness and between relevant or needless boundary conditions. The experiences of the Chair of Machine Elements at the TU Dresden are in the development of software independent methods for the dynamic simulation of drive trains. Beside the examples, presented here, constant researches are made in other fields of application. From the scientific point of view the main motivation for the chosen way is the establishment of the MBS-method to analyse complex drive technology in the machine and plant design and the increase of the acceptance and manageability of the fields of application analog to 3D FEM-systems during the last 10 to 15 years.

7 References

[1] Roberson, R.E.; Schwertassek, R.: Dynamics of Multibody Systems. Springer Verlag, 1988

[2] SIMPACK: Analysis and Design of General Mechanical Systems. INTEC GmbH, Wessling

[3] Schlecht, B.; Wünsch, D.; Matta, F.; Christianhemmers, A.; Gutt, S.: Simulation von redundanten Notaus-Stopp-Bremssystemen in Haupthubwerkantrieben von Gießkranen, Tagebaugroßgeräten und Umschlaganlagen. Vortrag anlässlich der VDI-Tagung „Schwingungen in Antrieben 2001“, Würzburg, 19. und 20.09.2001

[4] Schlecht, B.; Schulze, T. und Hähnel, Th.: Untersuchung der Interdependenzen von Rotor-, Triebstrang- und Gondelschwingungen von Mulit-Megawatt-Windenergieanlagen mittels Mehrköper-Simulation; Tagungsbeitrag "AKIDA 2004", 9. und 10.11.2004, Aachen

[5] Bossanyi, E. A.: Bladed for Windows. Garrad Hassan and Partners Ltd., Bristol, 2002

[6] Flex V: Simulation Program for Wind Loads. Denmark

[7] Hau, E.: Windkraftanlagen. Springer Verlag, 2003

[8] Gasch, R.; Twele, J.: Wind Power Plants. Solarpraxis AG, Berlin 2002

[9] Wünsch, D.; Schlecht, B.; W. Rulka: Mehrkörpersimulation im Maschinen- und Anlagenbau Konstruktion (44) 1992, Heft 7/8, S. 265-273

[10] Schlecht, B.; Schulze, T.; Hähnel, Th.; Hofmann, W.; Rabelo, B.; Basteck, A.; und Tilscher, M.: Hydrodynamisch geregeltes Überlagerungsgetriebe als neues Antriebskonzept für Windenergieanlagen ohne Leistungselektronik. VDI/VDE-Tagung – Elektrisch-Mechanische-Antriebssysteme, Fulda, 6. und 7.10.2004

[11] Guyan, R. J.: Reduction of stiffness and mass matrices. AIAA-Journal 1965 2,3 S.380

[12] Schlecht, B.; Schulze, T.; Hähnel, Th.; Rosenlöcher, Th.: Assesyment of Dynamic Loads in Multi-Megawatt-Drive-Trains by Means of Multibody-System-Simulation; International Conference on Gears; VDI-Tagung 14. bis 16.09.2005, München