SKF

Alessandro Sansone

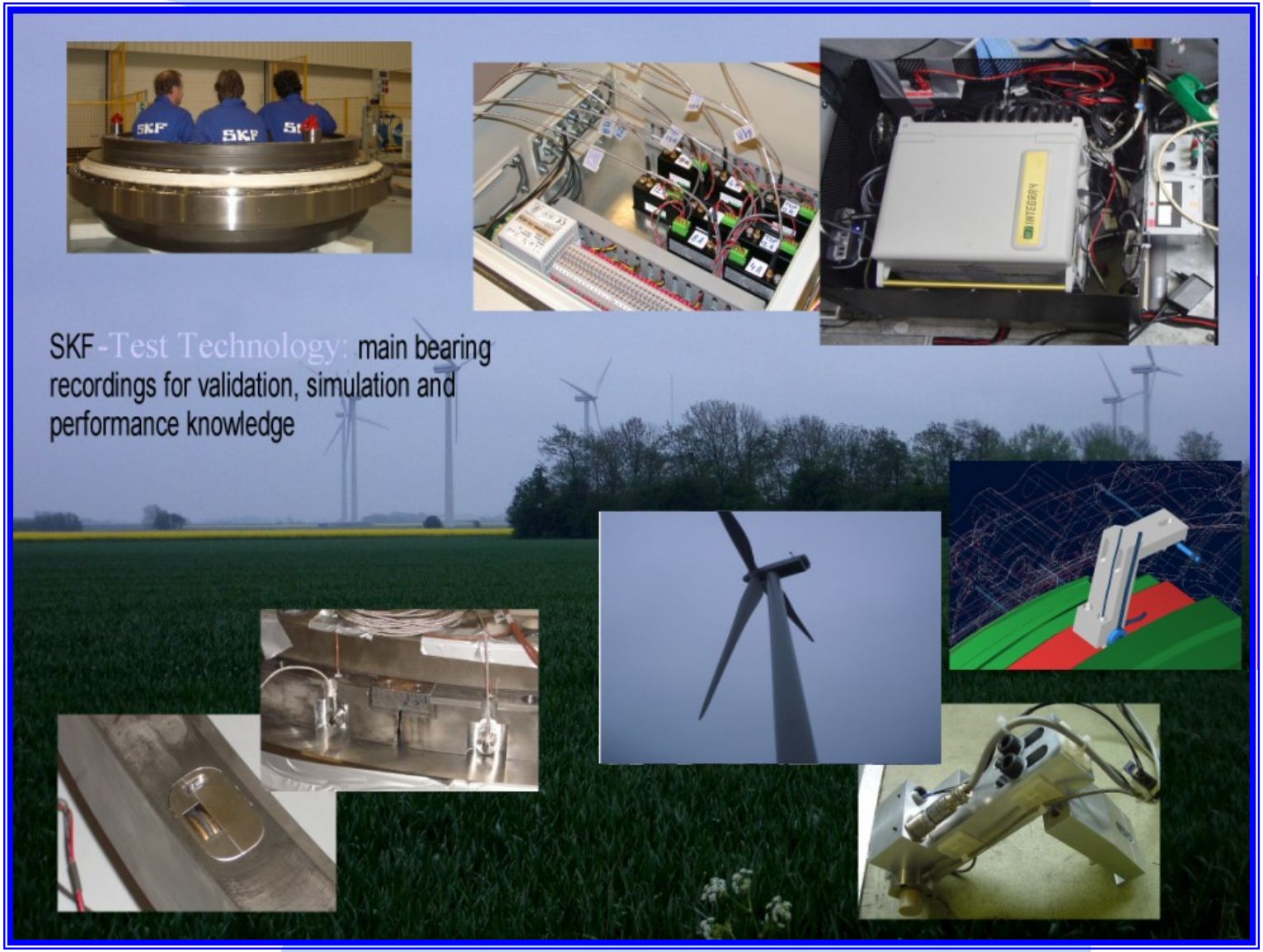
SKF-Test Technology: main bearing recordings for validation, simulation and performance knowledge

Objectives

To evaluate bearing loading conditions in operation and to estimate bearing life.

The measurements

(displacement)

SKF Double Row Taper Roller Bearing

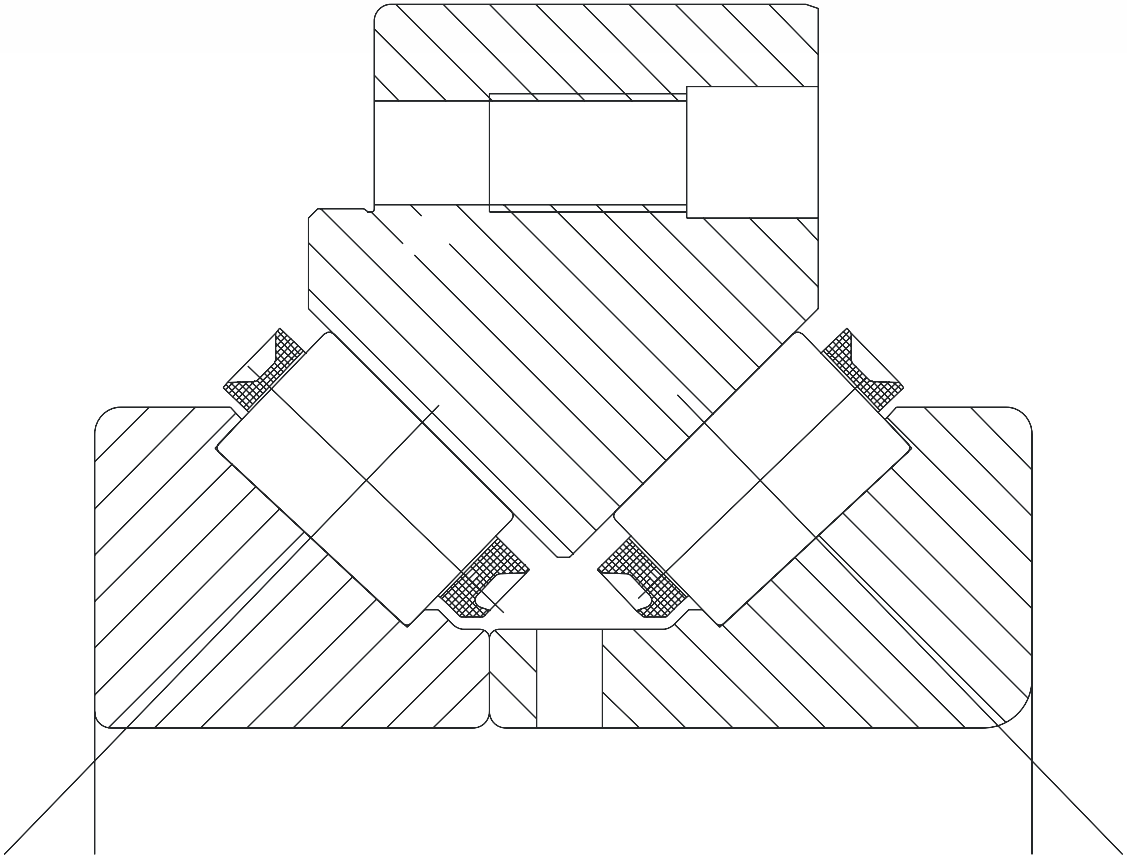

The retainer ring solution

Retainer ring instrumentation

View: standing in front of t he windmill, facing the rotor

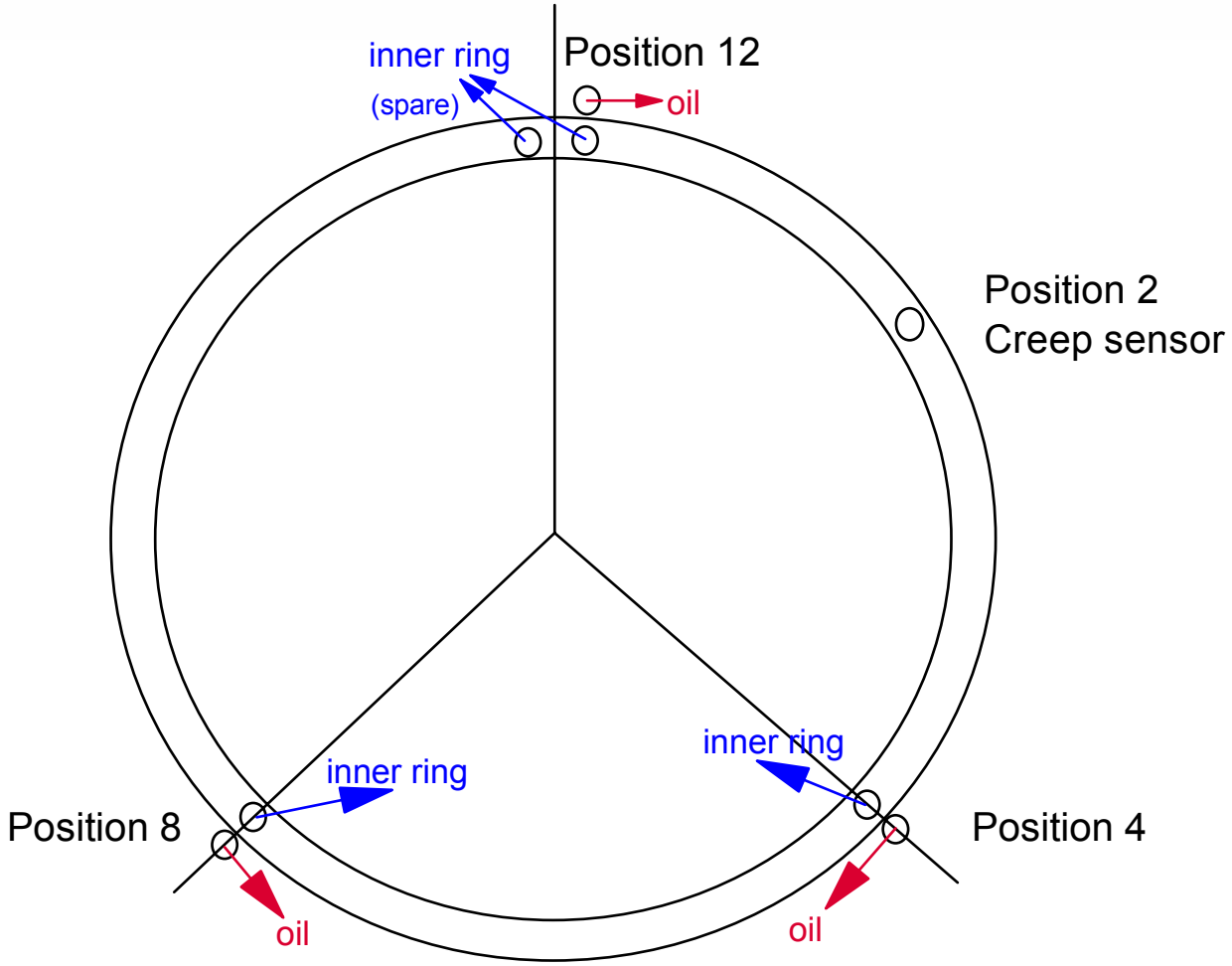

Pro-E design

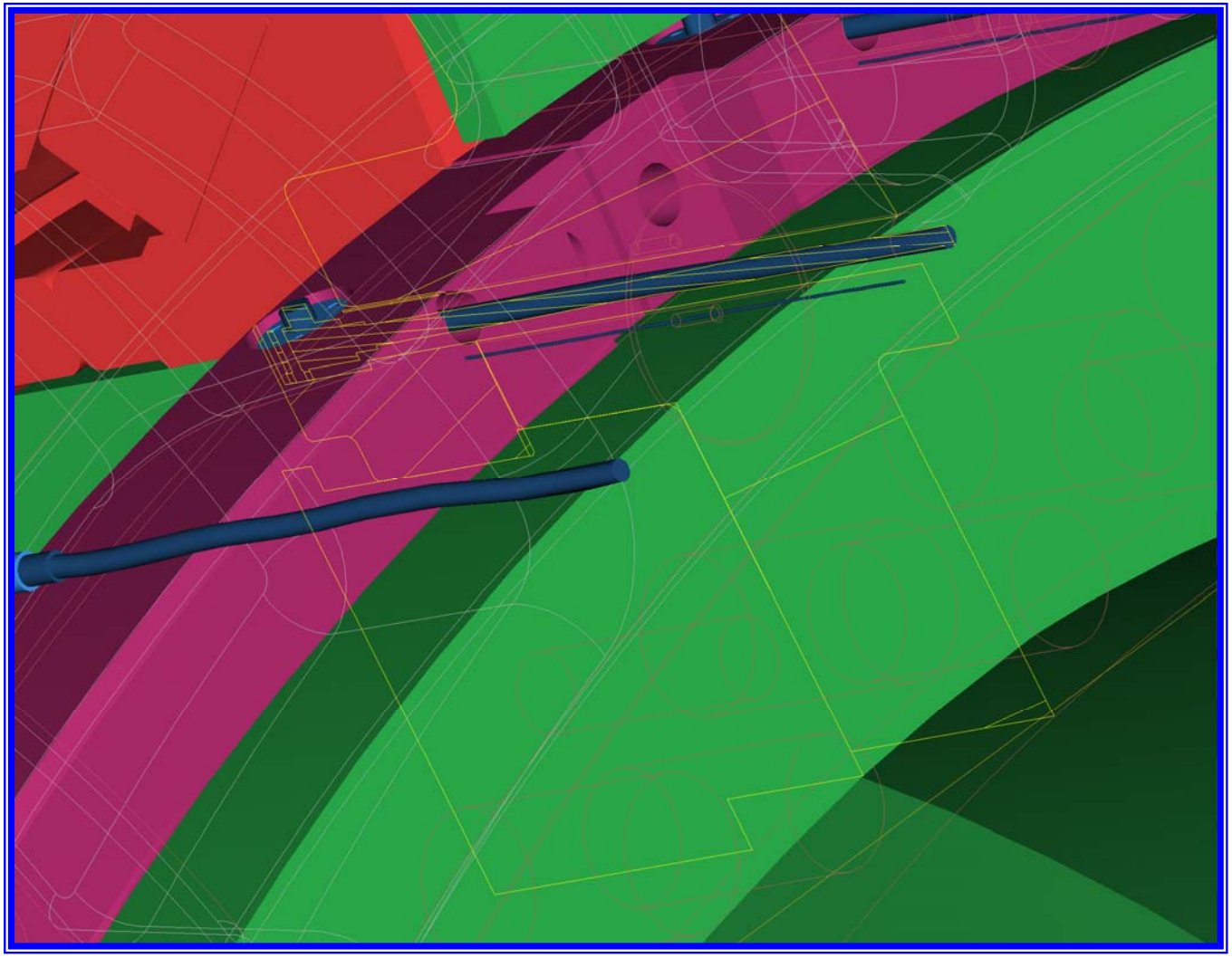

The bracket (OR measurements)

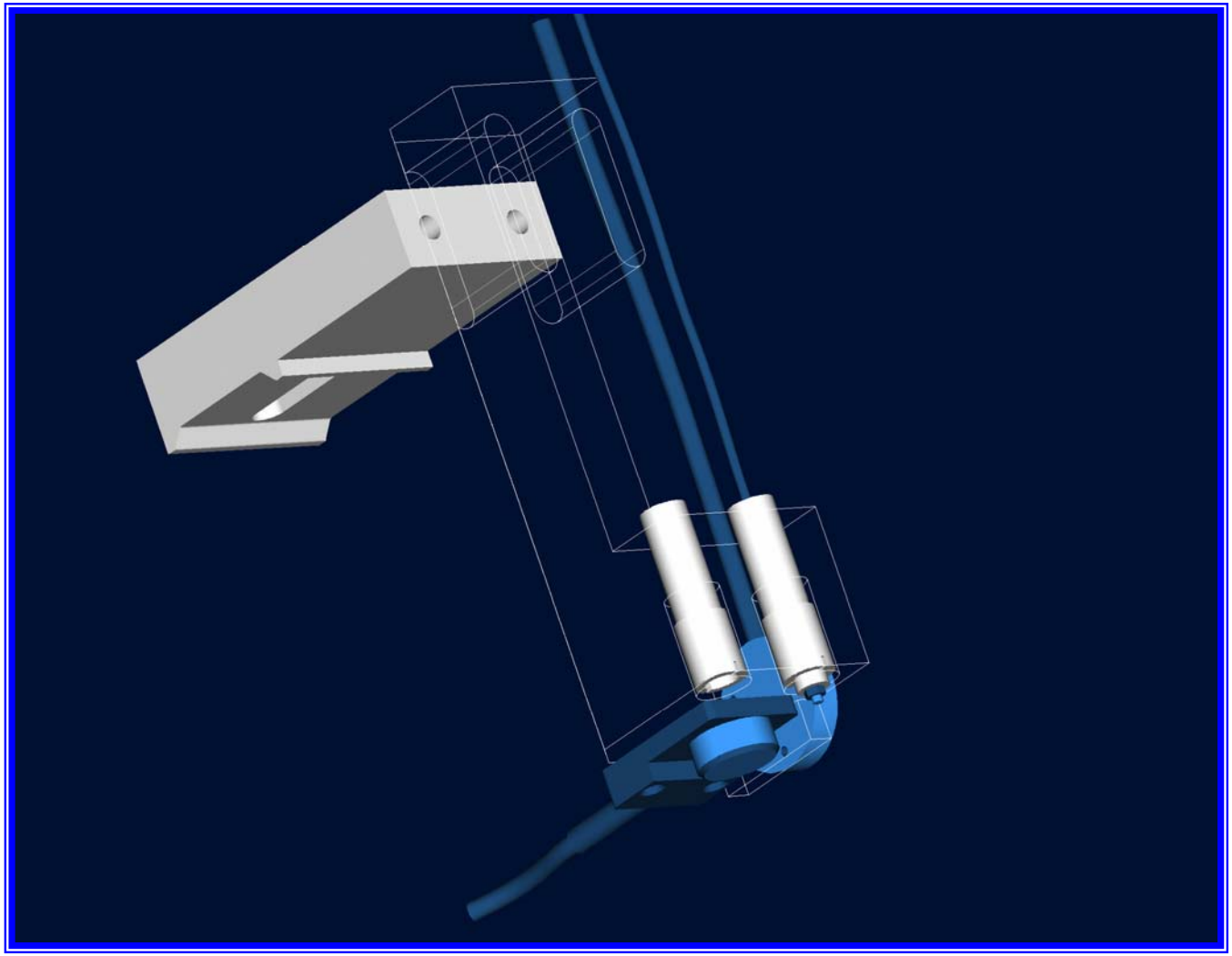

Setup of displacement

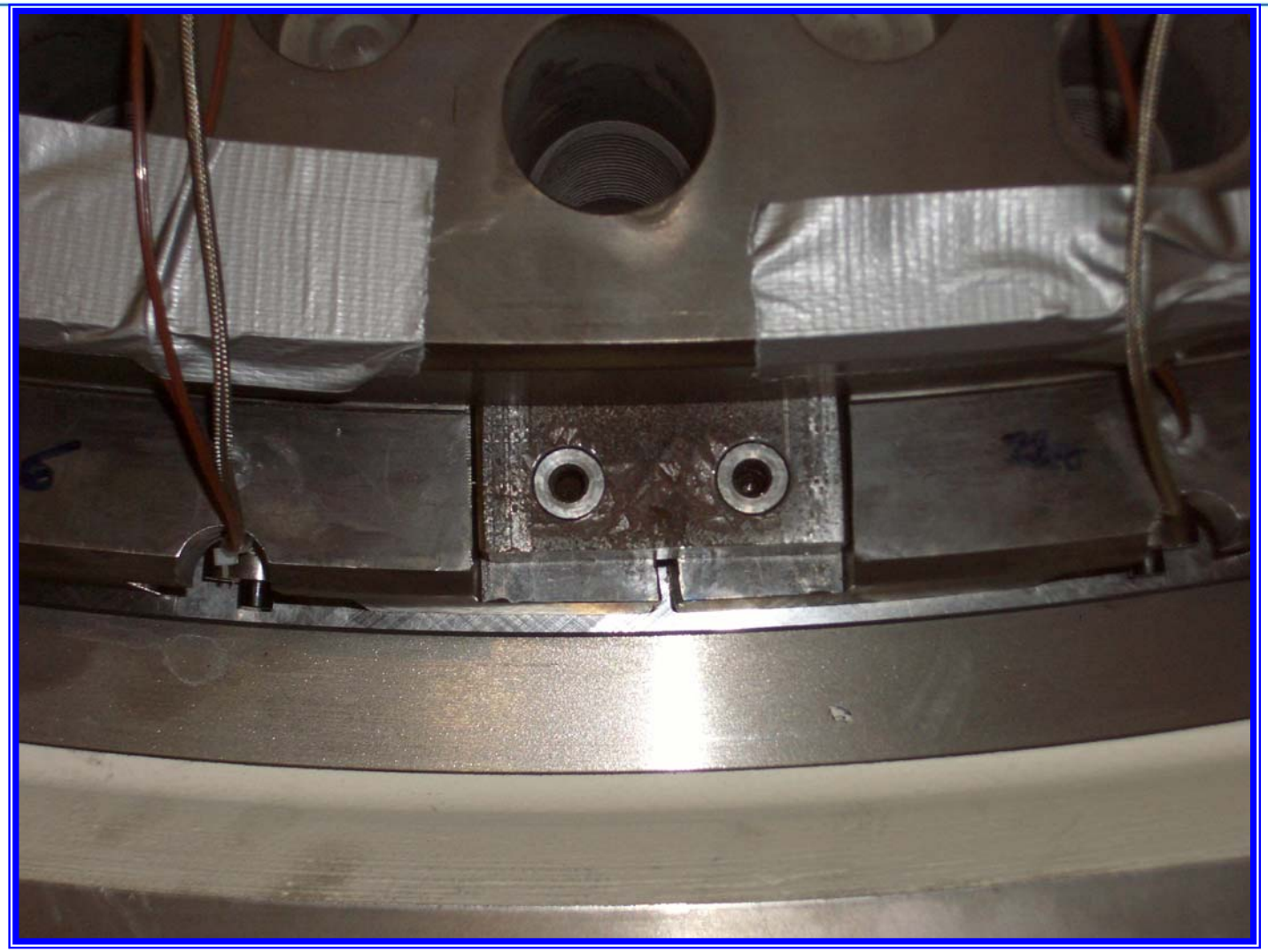

Measuring equipment layout

Measuring equipment layout of the eddy current measuring system.

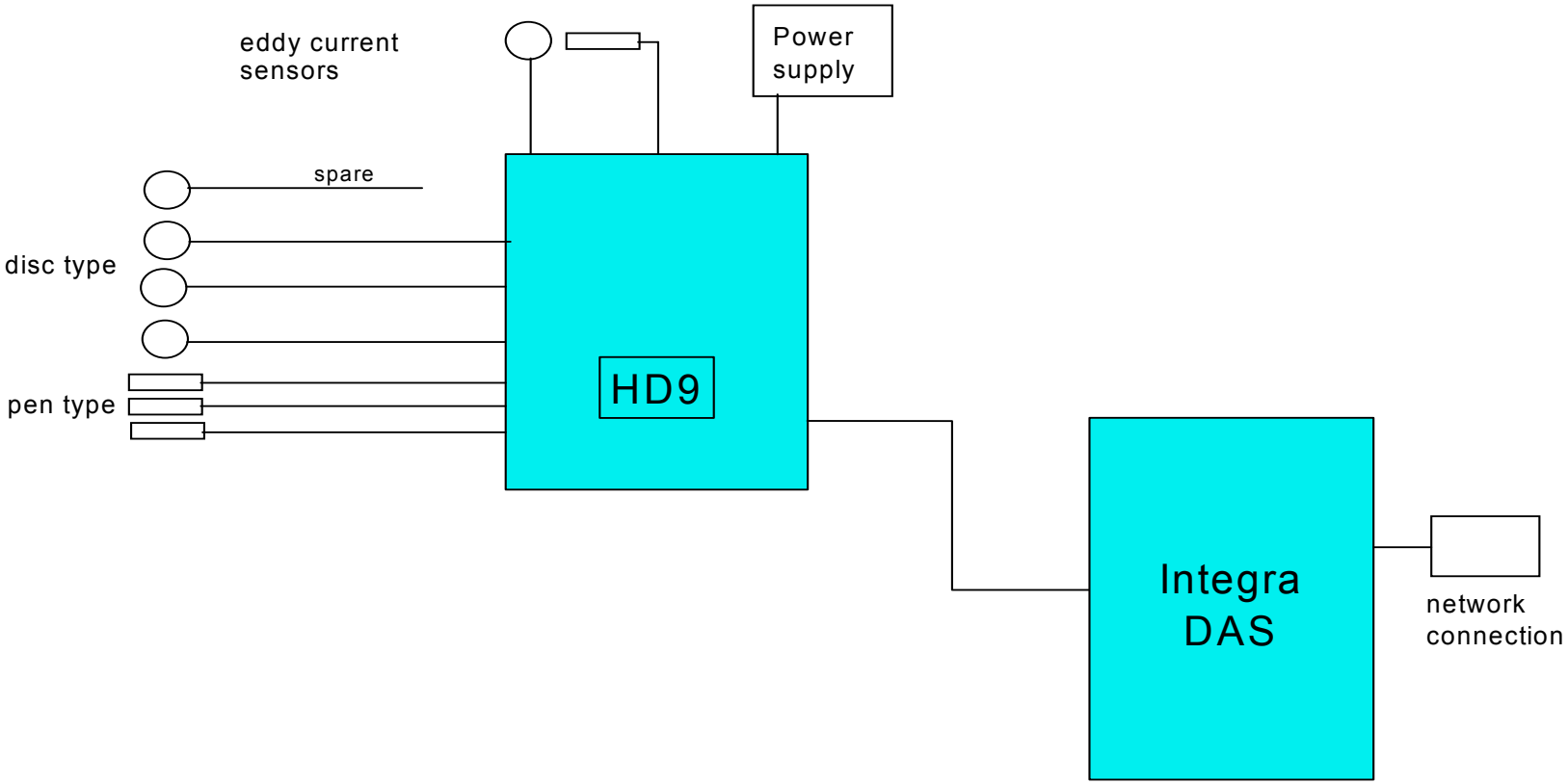

Displacement sensors

- Eddy current type, in disc (for radial) and pen (for axial) form
- Cables (armored and EMC screened) permanently fixed to the sensor
- Eddy current drive (electronics to condition and amplify the signal)
- Protection box for drivers and for DAS (Faraday cage)
- Sensor accuracy up to 2 µm (10 µm the radial top one)

Load Cases

from displacement measurements

One month signal

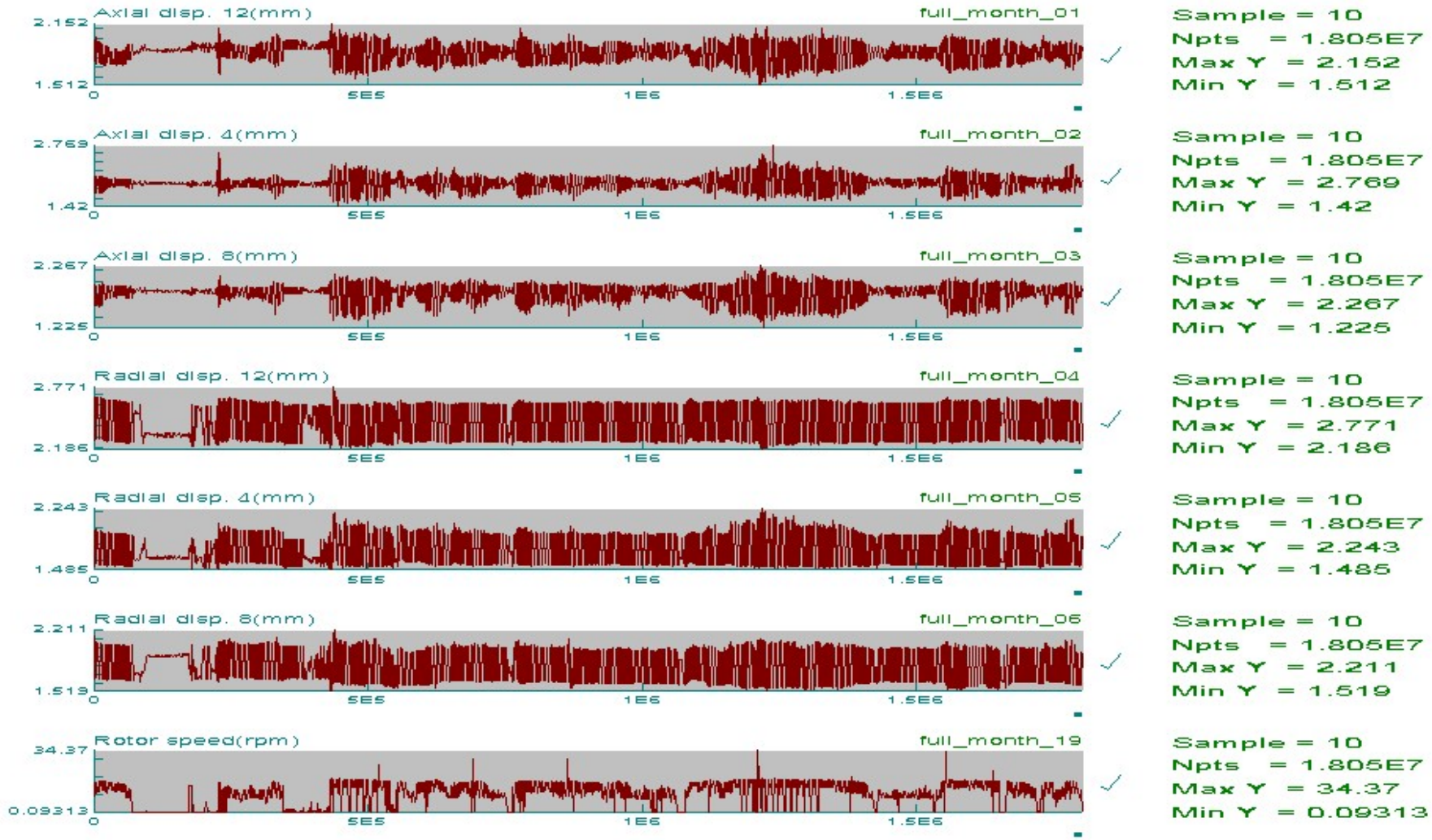

Decimating

- Total number of cases: 18050000 at 10 Hz
- Spikes and zero speed values removed: 11882496

  skipped at beginning: 100

  skipped at the end: 4398

- Decimation at 2 Hz: 2375400 combinations on 2375599 = 99.99%
- Decimation over 10000 events per combination: 1896694 combinations = 79.8 % of all the possibilities
- Definition of 4 magnitude levels per sensor
- A total of 18 cases defined

Orpheus simulation

Software description

Orpheus uses FEM models in combination with a special developed reduction method (an extended Component Mode Synthesis) to minimize the model size to almost the absolute minimum hence reducing the calculation time tremendously

It offers the possibility to perform static and dynamic analyses of complete machines (gearboxes, electro motors, windmill, pumps, suspensions, etc.)

Modeling

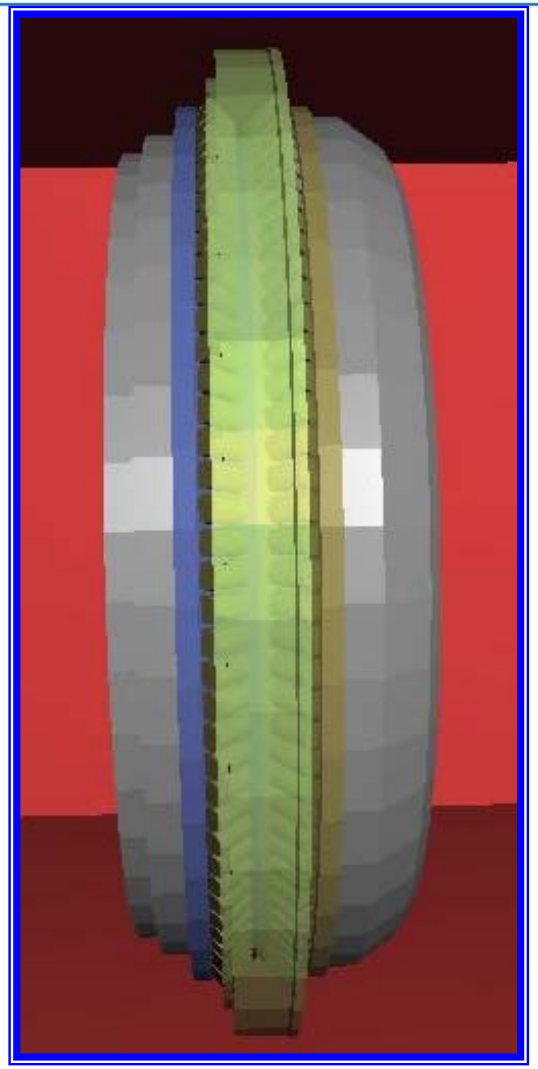

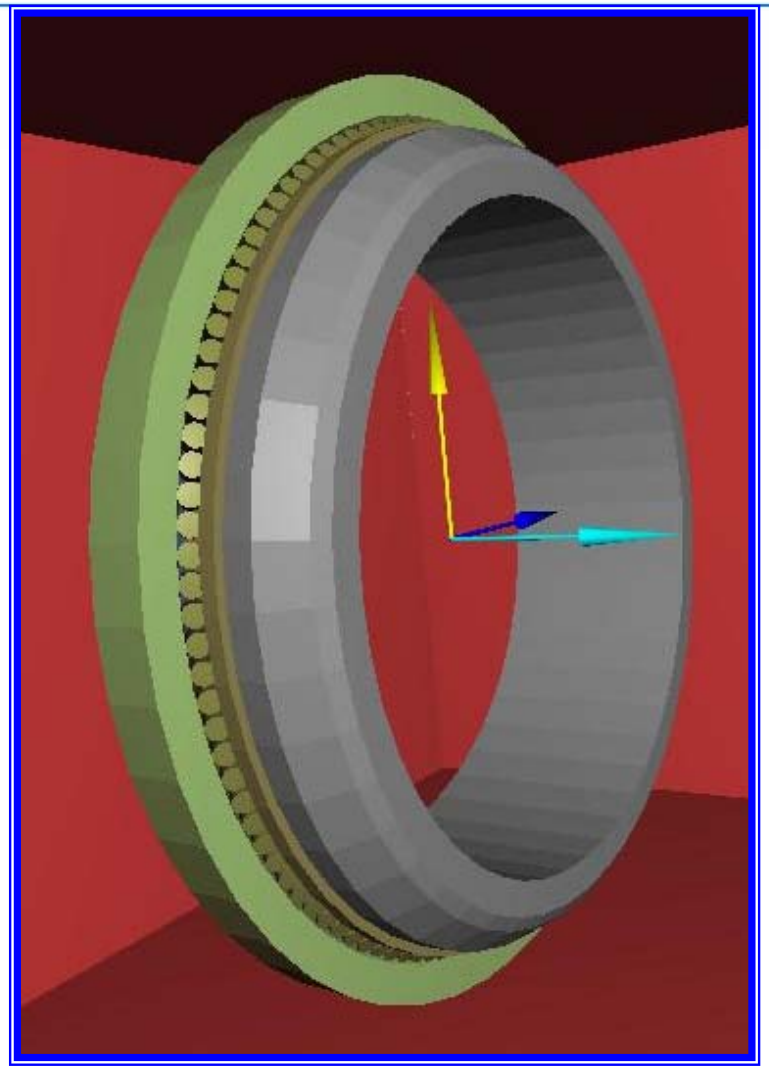

Bearing global CS

- X = dark blue
- Y = yellow
- Z = light blue

Model description

- A flexible model of the IR inboard (in color blue)
- A flexible model of the IR outboard (in color gold)
- A flexible model of the OR (in color green, transparent)
- A flexible model of the stator (in color metal). This is the stationary gear for the first planetary stage. This component includes also the retainer ring.

Boundary conditions

The rotor is constrained in all the DOF's at the bolt location where it is connected to the nacelle, which is considered infinite stiff (grounded)

IR – OR relative displacements applied on the OR in the three measuring positions (at 120°) in radial and axial direction

OR rotation speed

Bearing operating conditions

- The IR's are mounted on the stator with radial interference fit
- IR inboard retaining ring is mounted so that in operating conditions a resulting bearing preload acting in the bearing
- Fixed operating temperature
- Lubricant characteristics aligned to appplication

Analysis

An Orpheus analysis was done using as input the defined 18 displacements cases. These cases, representing OR-IR relative displacements, were applied to the simulation model to calculate bearing forces and moments, load distributions, max contact pressure, friction torque and estimated bearing life.

Result examples

Load distribution

- Bearing load distribution (IR – Roller contact forces),i.e. LC11:

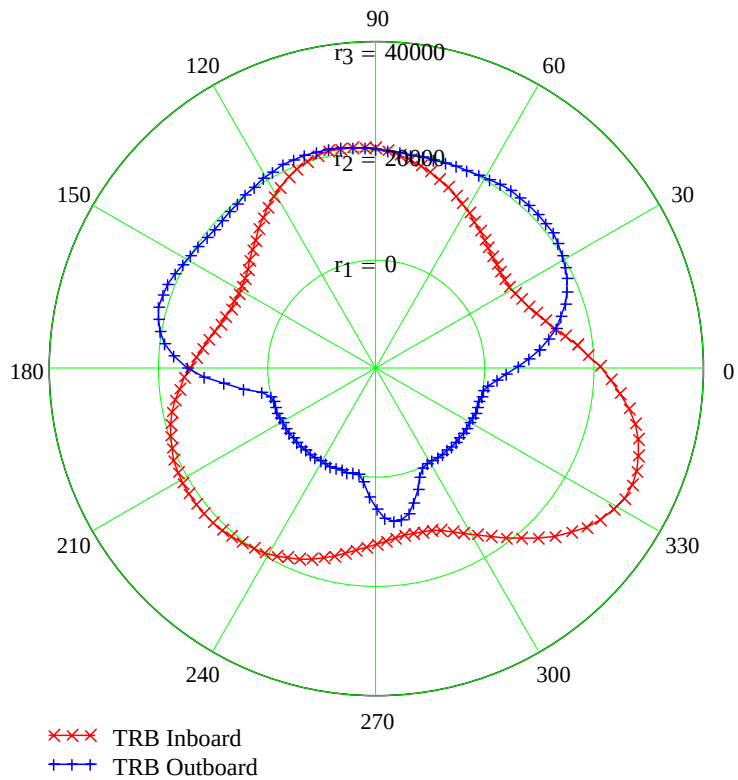

Bearing load

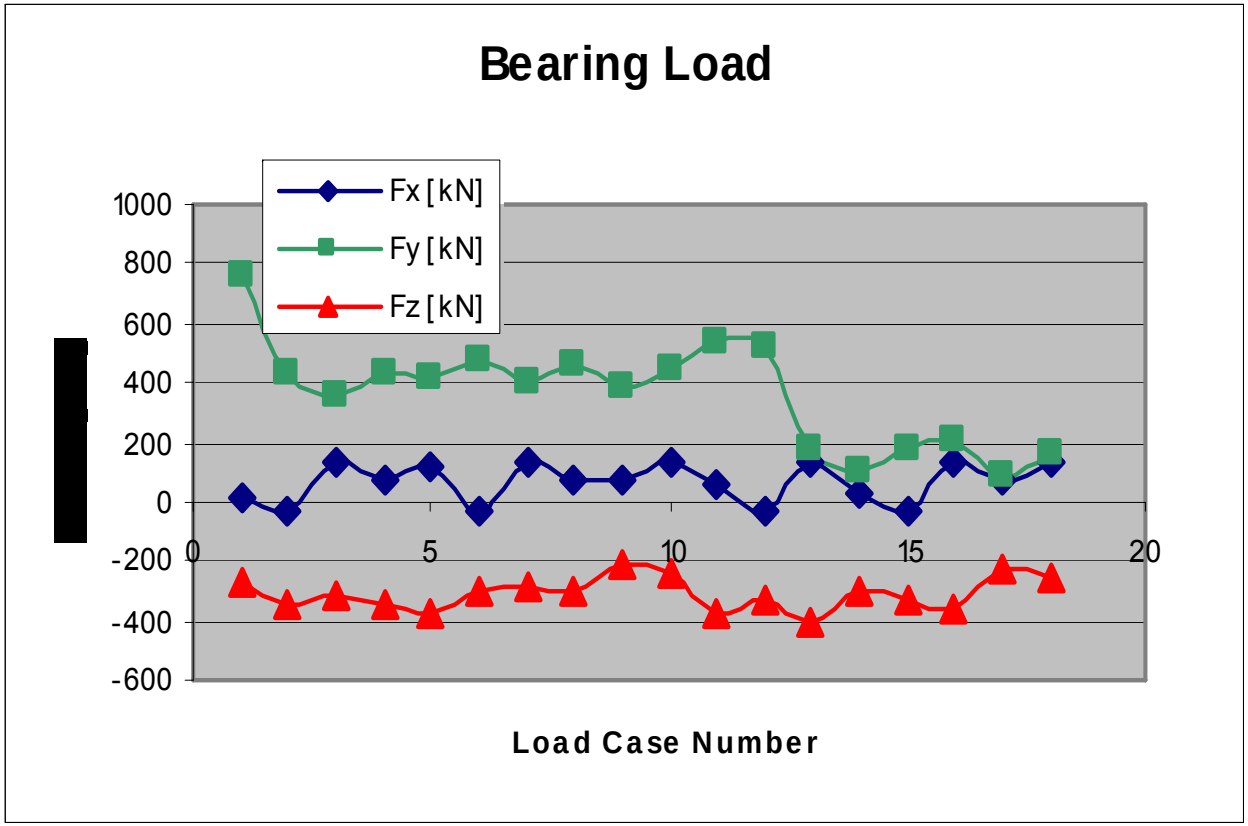

Bearing moments

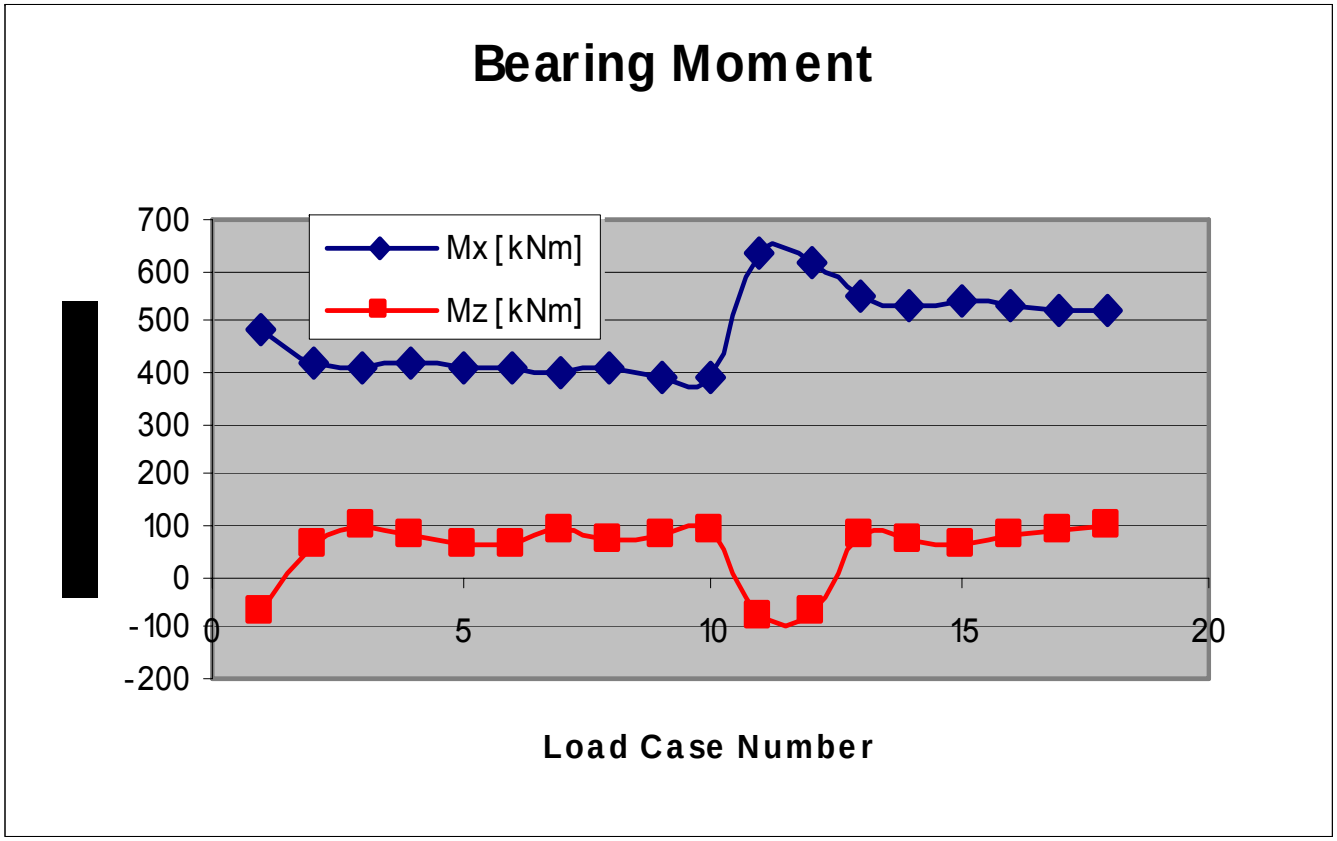

Life Estimation

- Combined Bearing Life considering the 18 load cases:

Catalogue Basic Rating Life [h]	Fatigue Life DIN281 addendum [h]	AFC Life [h]
2,26E+05	1,95E+07	6,30E+06

Conclusions

Main results

- The results show correct bearing behavior leading to reliable operation
- The project shown a powerful approach combining testing with theory
- Several scenarios for future analysis have been found
- This technique can be used to validate main shaft and bearing performance

Questions?