Prof. Wolfgang G. Brunner

Maschinen

FLYDRILL BFD 5500

Wind Farms in UK

Offshore Wind Farm Barrow Location

Barrow Offshore Wind Farm
Foundation Design Criteria

Offshore wind farm of 30 wind turbines (3.0 MW each)

30 monopile foundations

Steel pile diameter 4.75 m

Wall thickness 45 - 80 mm

Weight per pile up to 452 tonnes

Pile length 49.5 - 61.2 m

Embedment depth up to 40.7 m

Monopile Foundation Work Sequence

- place monopile casing on seabed
- set up IHC Hydrohammer and drive pile to refusal
- remove Hydrohammer
- set up Bauer Flydrill BFD 5500
- drill inside monopile with pre-bore bucket Ø 3 000 mm followed by reamer bucket Ø 4 400 mm
- re-drive and re-drill alternating to final depth
- remove Flydrill BFD 5500
- install transition piece and grout connection

Flydrill BFD 5500

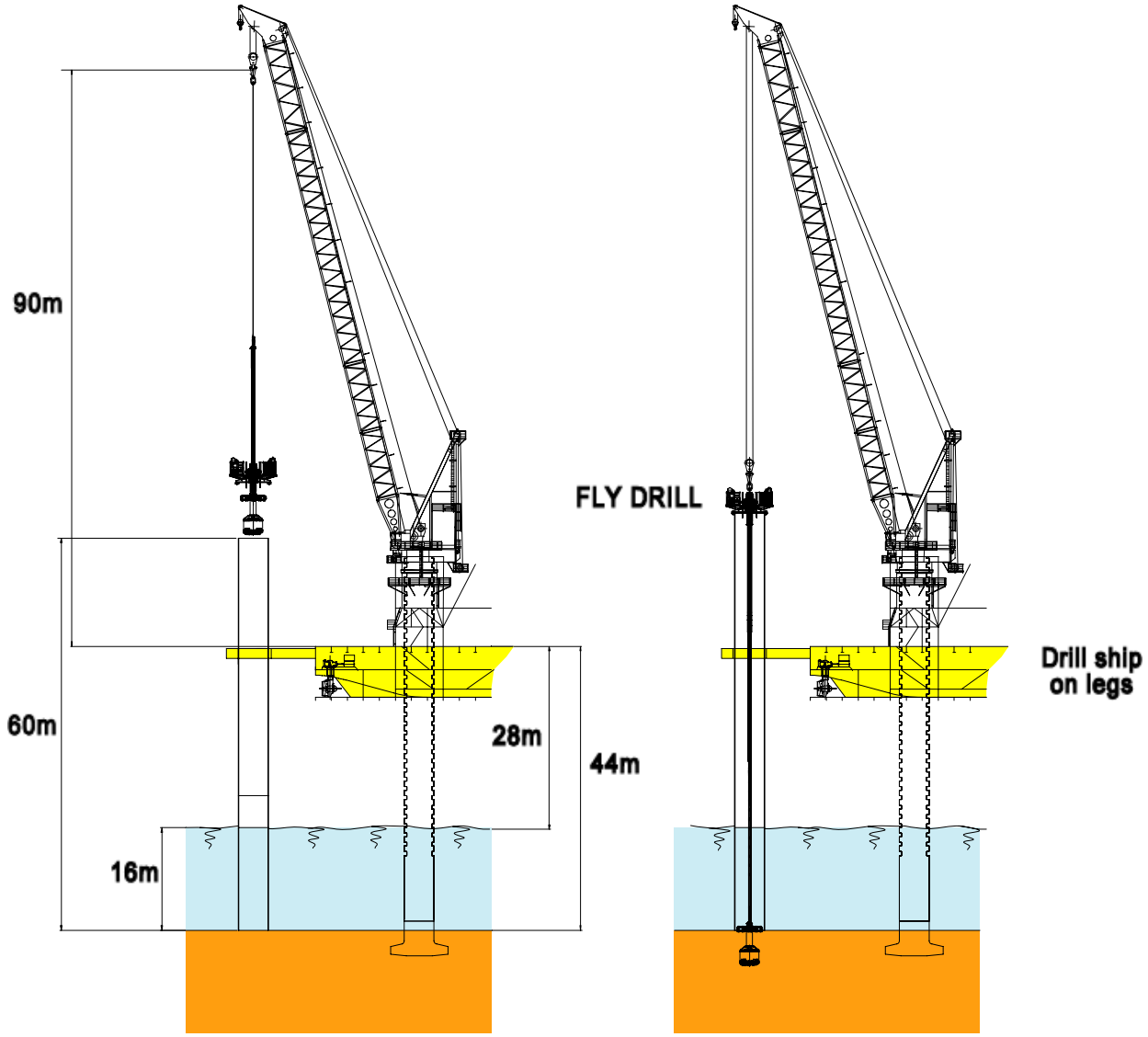

Flydrill BFD 5500

KDK 480 kN
Kelly 3 / 65
2 x 260 kW power packs
Remote controlled

Total weight
incl. Kelly bar: 52 ton

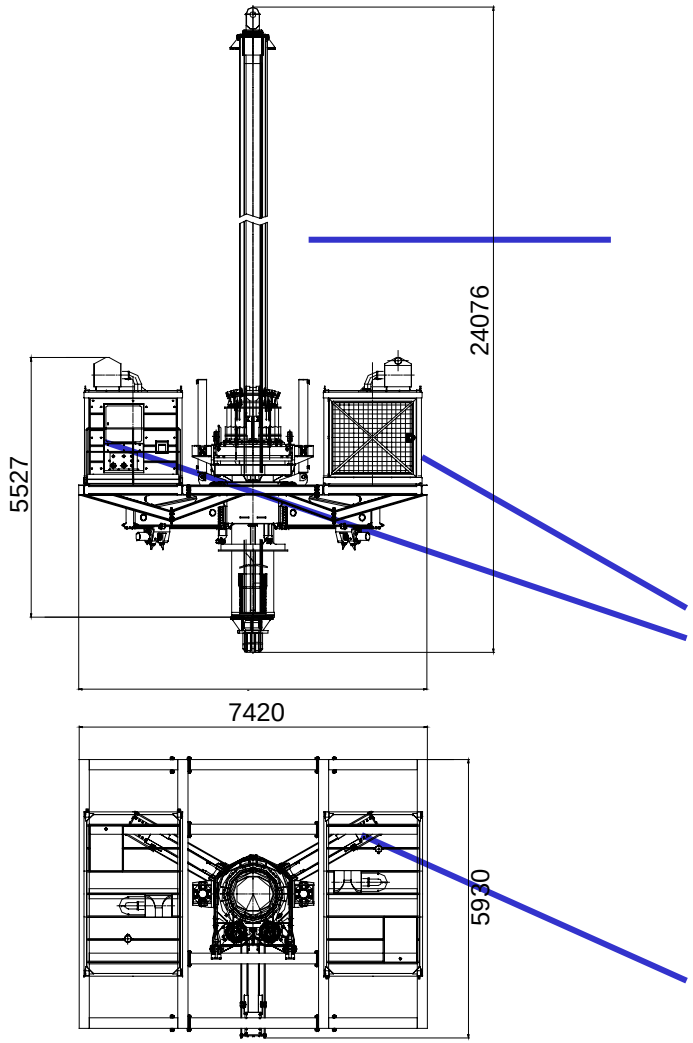

Kelly bar 3 /65

Power packs

3 Clamps

Flydrill BFD 5500

Pre-bore bucket Ø 3000 mm

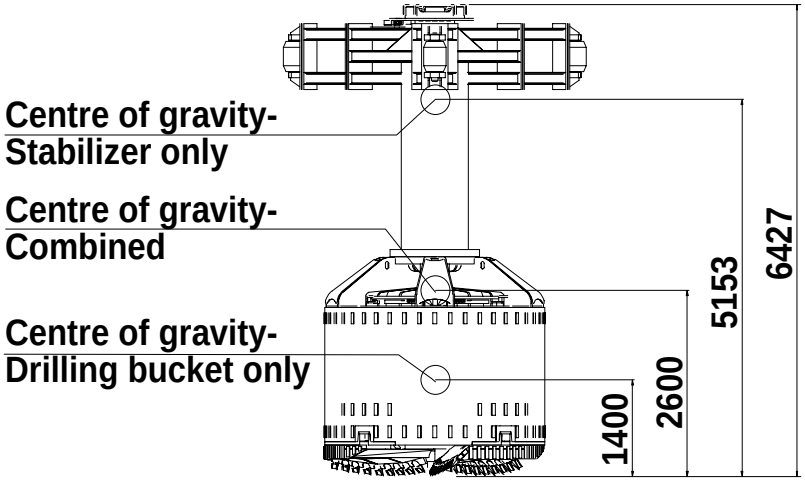

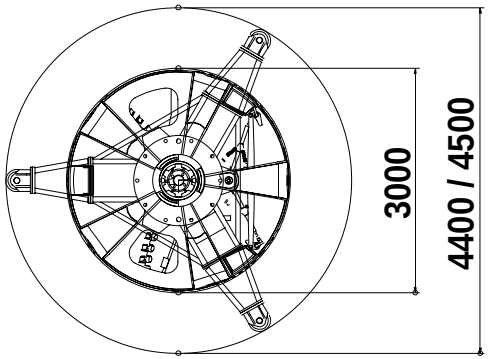

Reamer bucket Ø 4400 mm

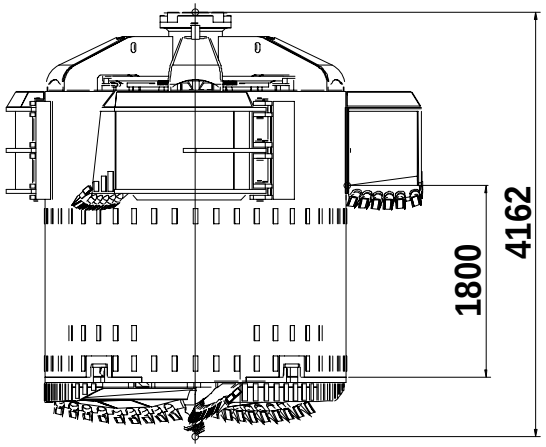

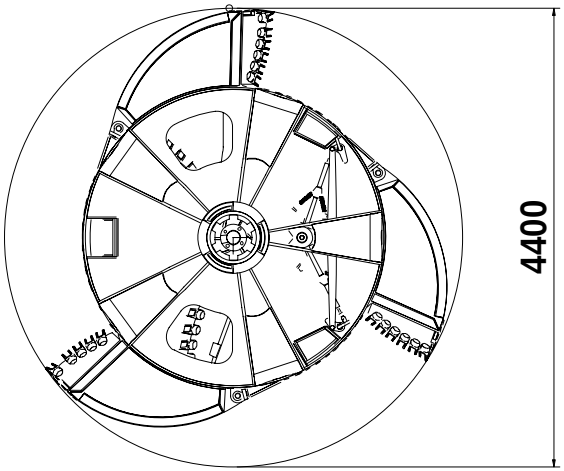

Flydrill BFD 2500
Victory Driscoll Bridge, USA

Flydrill BFD 5500
Test at Workshop Aresing

Turbine Installation Vessel Resolution

TIV Resolution

TIV Resolution in the Harbour

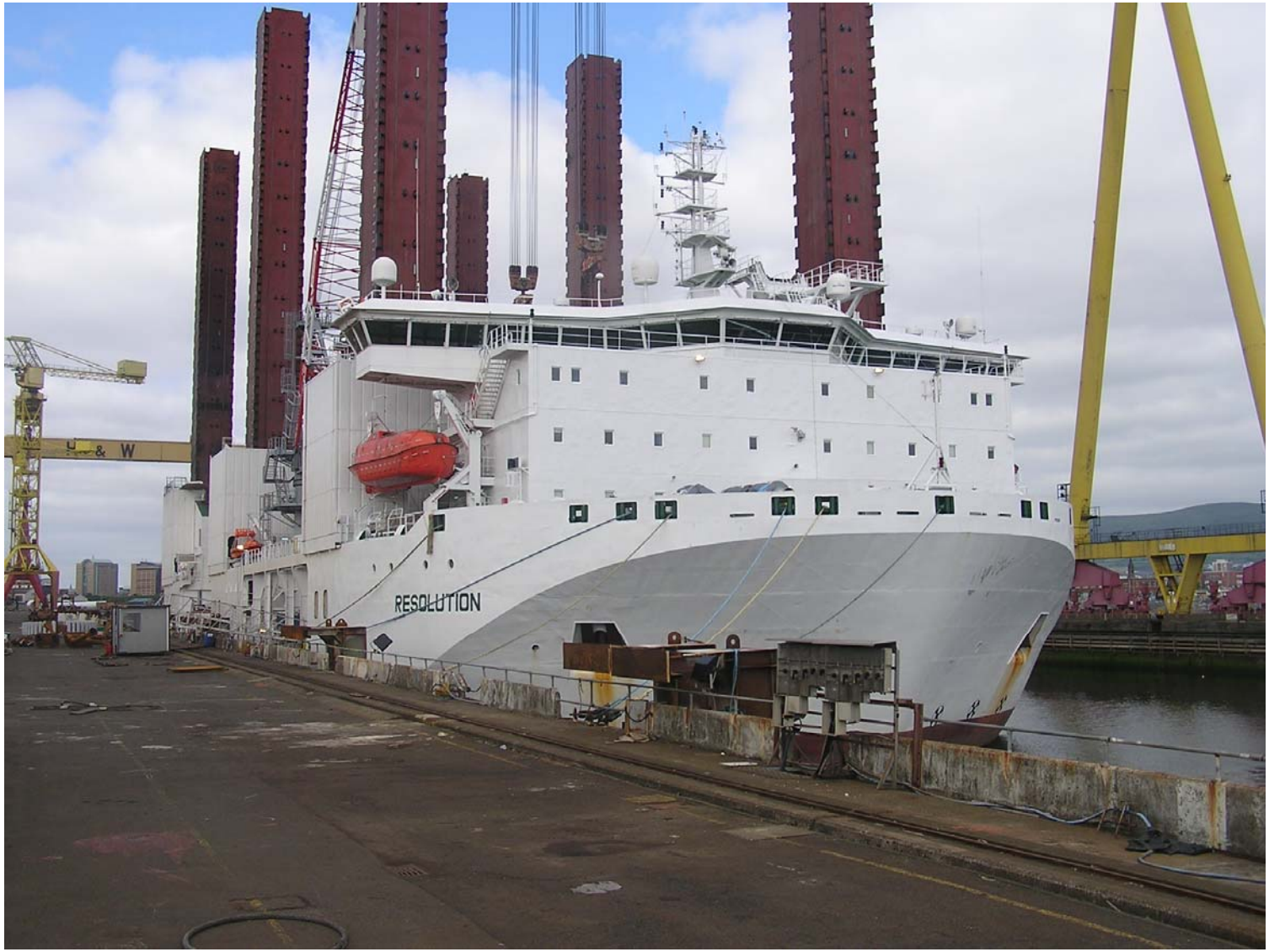

Loading of Monopile Casing

Loading of Transition Pieces

Loading of Flydrill BFD 5500

Flydrill BFD 5500 on TIV Resolution

Flydrill BFD 5500 and Casings on Board

Assembling Flydrill BFD 5500

Transfer of Crew to TIV Resolution

Upending of Monopile Casing

Upending of Monopile Casing

Driving Monopile Casing with Hydrohammer

Driving Monopile Casing to Refusal

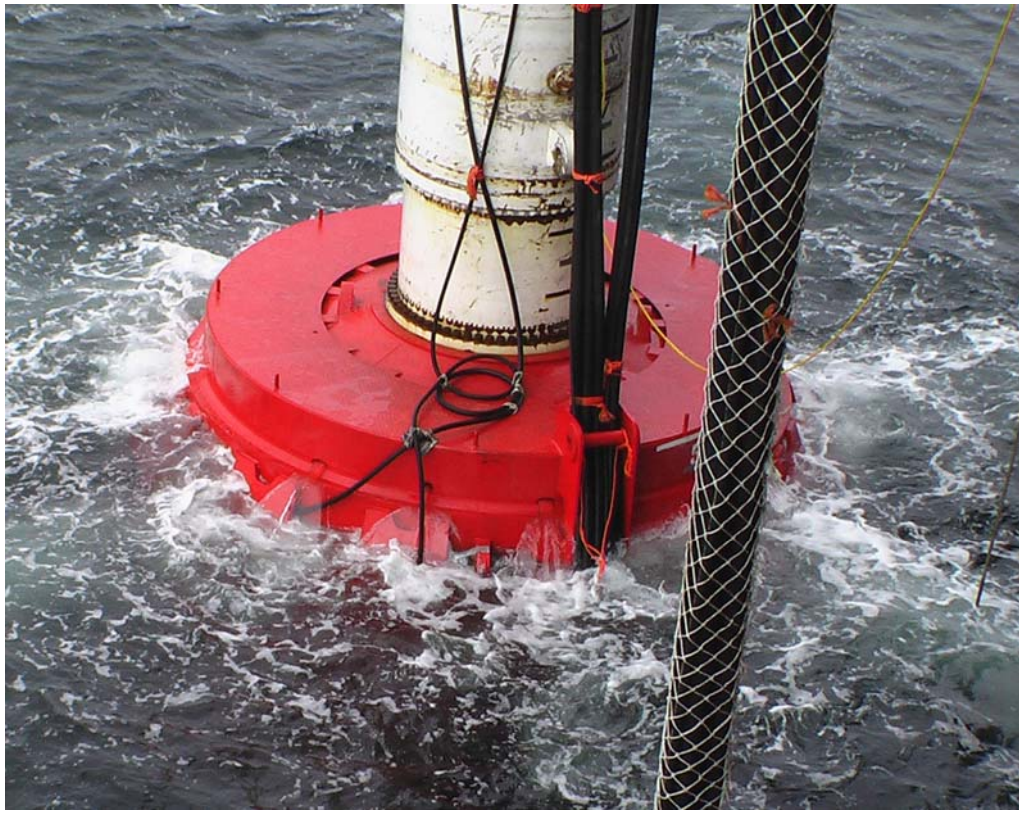

Set up Flydrill BFD 5500 on Monopile Casing

Drilling with Bucket inside Monopile Casing

Drilling and Lift off Flydrill BFD 5500

Flydrill BFD 5500 after Drilling

Disposal of excavated Soil into Sea

BFD 5500

at work

B-Tronic Control Module

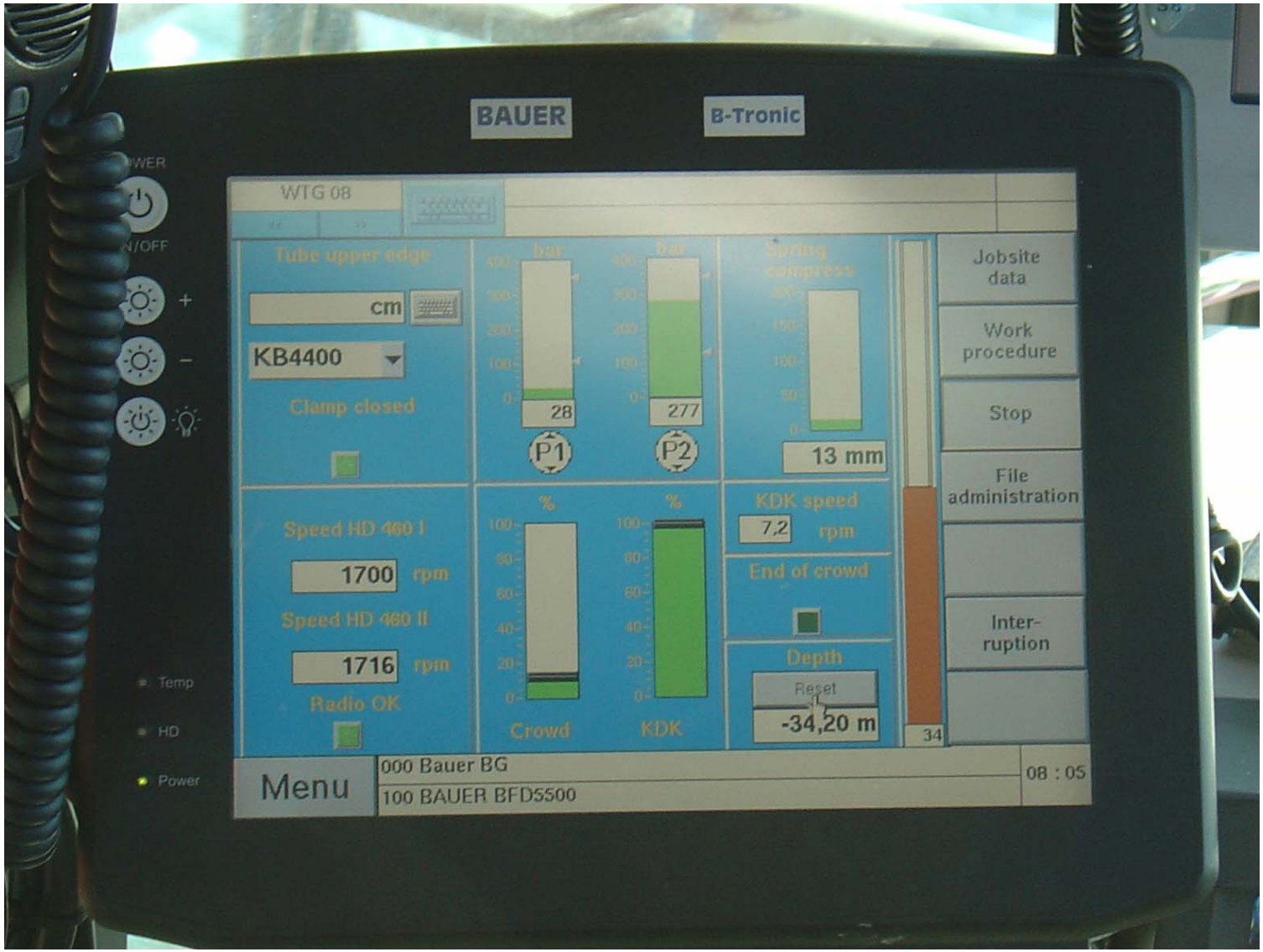

Geotechnical Cross-Section

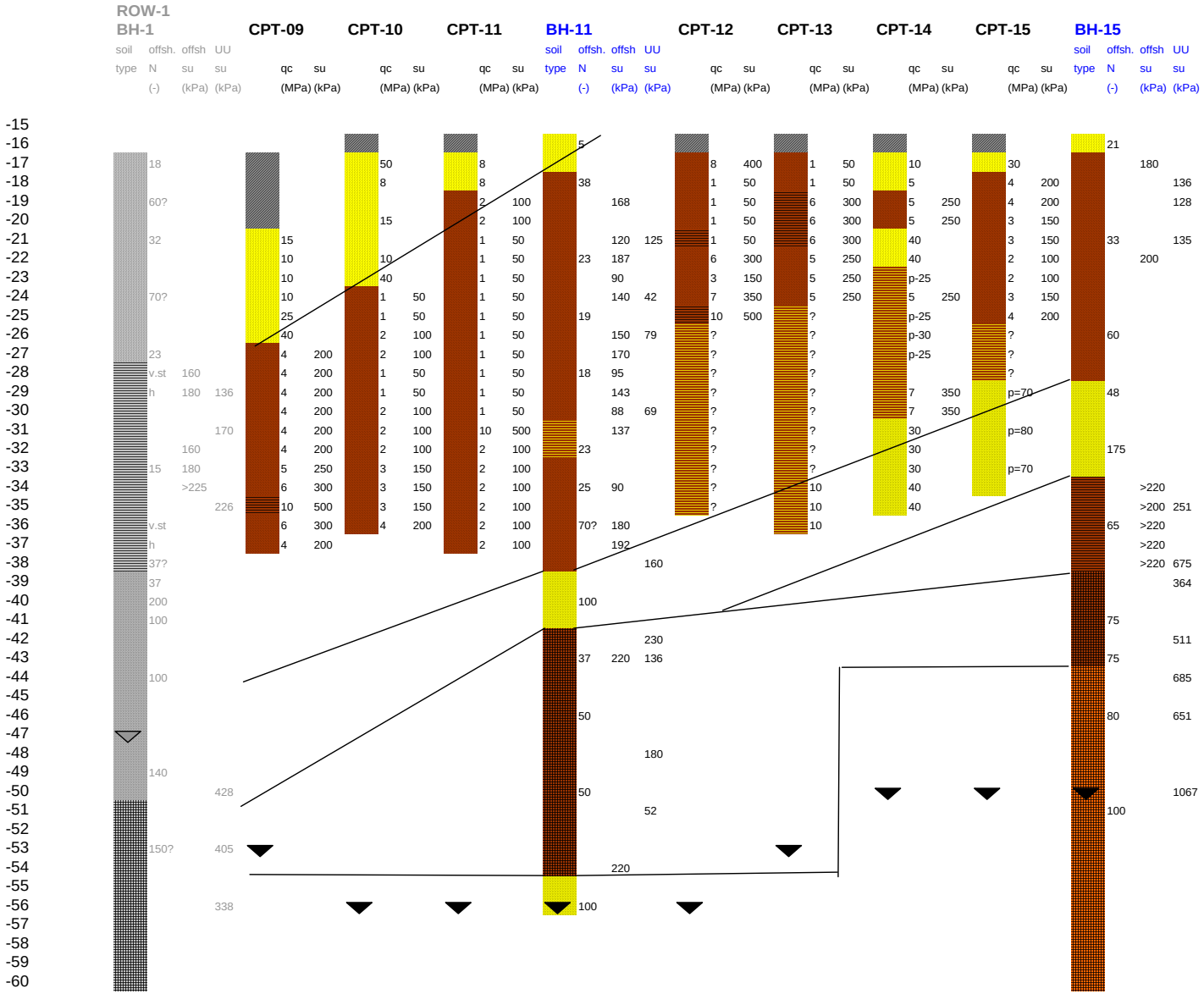

Soil Profile of Borehole 15 (from Seabed)

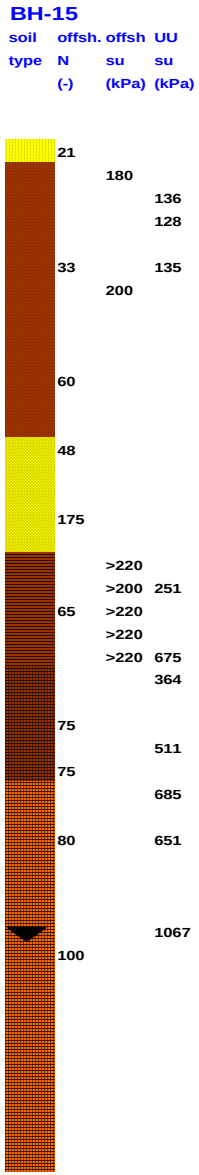

	SPT, N-blows
• medium dense sand	21
• firm to stiff clay	33/60
• very dense sand	48/175
• very stiff to hard clay	65
• stiff to hard clay (completely weathered mudstone)	75
• very stiff to hard clay with many sand lenses	80

Drilled Soil:

Installation of Transition Piece on Monopile Casing

Grouting of Transition Piece

Completed Monopile with Transition Piece