Transmission systems for offshore wind farms in the Netherlands

Wil Kling[1], Paola Bresesti[2], Ivan Valadè[2], Daniele Canever[2], Ralph Hendriks[3]

***Abstract* - In this paper a detailed technical analysis is presented for connecting three different sizes of wind farms (100, 200 and 500 MW) considering three different transmission solutions: 150 kV AC, 400 kV AC and ±150 kV VSC-HVDC. After a brief overview of the features of the possible connection solutions, the related operational aspects have been evaluated. A comparative economical assessment is made, taking into consideration the costs of investments, losses, maintenance and energy not supplied. Furthermore short-circuit calculations have been performed for a preliminary assessment of the possible effects of the presence of large-scale offshore wind generation in the Dutch transmission system.**

***Index Terms*—economical assessment, grid connection, HVAC, offshore wind farm, short-circuit analysis, VSC-HVDC**

I. Introduction

The application of offshore wind energy is a keystone in the policy of several European countries for the large-scale use of renewable energy. Consequently, the realisation and connection of offshore wind farms are receiving much attention, especially in Denmark, Germany, Sweden, the UK and the Netherlands. Considering the installed wind power capacity worldwide, it becomes clear that Europe is more involved in this technology than other continents. The Horns Rev wind farm in Denmark, which has been constructed in 2002 and has a capacity of 160 MW, can be regarded as a pilot project. It is the first plant employing an offshore transformer station, which is connected to the shore through an approximately 15 km long cable.

The extension of wind power can have severe impacts on the transmission system because of the remote siting and the possible problems for system security.

Due to the fact that electrical energy cannot be stored in a substantial way, the need for short and long term power balancing can require an adjustment of the operational strategy of power systems with a high wind power penetration level. Besides, in case of windstorms or system disturbances (such as voltage drops), there exists the increased risk of a sudden and uncontrolled shutdown of the wind farms, which can severely affect the security of the system.

Wind generation also has an influence on the network's voltage control capability. On one hand, wind turbine generators (WTG) can demand a large amount of reactive power (depending on the technology) and on the other hand they replace conventional thermal power plants that have excellent voltage control capabilities.

In order to reduce the impact of wind generation on the transmission system, the connection through HVDC based on voltage source converters (VSC) seems a promising solution. The major benefit of this technology is its ability to vary the reactive power supplied and, as a consequence, to help in supporting the voltage at the point of common coupling with the transmission network.

In this paper a case study will be presented comparing connection solutions based on conventional HVAC technology and VSC-HVDC, for three different sizes of offshore wind farms.

II. Overview of the Possible Connection Solutions

Present wind turbine technology distinguishes between constant speed and variable speed turbines [1]. In the first case a squirrel cage induction generator directly connected to the grid is employed and a gearbox is needed to use a standard generator with rotating speed of about 1500 rpm. In variable speed WTG's the mechanical and electrical speed is decoupled through a power electronic converter. In the doubly fed induction generator system the stator is connected directly to the grid and the rotor to the converter. This system allows the rotational speed to vary roughly between 60% and 110% of the rated speed and requires a converter rating of only about 35% of the power rating of the turbine. In the direct-drive synchronous generator system the stator is connected to grid through a converter, the generator is excited with permanent magnets. This set-up allows for an even larger range in which the rotational speed can vary. The gearbox can be omitted, but at low mechanical speeds this requires a large generator that can withstand huge torques.

At the moment the largest WTG's have a power rating of 5 MW and higher values can be expected in the future. With respect to the generator voltage level it can be observed that in the last few years only a couple of turbines with a level higher than 1 kV has been developed; at higher voltages the conductor insulation takes more space and a larger generator is required. For this reason the generator voltage is expected not to exceed 5 kV. In accordance with these recent developments the rated power and voltage of the turbines are supposed to be 5 MW and 5 kV respectively.

It is the purpose of the offshore wind farm's collection system to collect the power produced by the turbines and to bring it to a central point, from where the connection to the main grid is made. String and star clustering are the usual configurations for the collection system. With string clustering a number of generators inject power into a feeder, whose voltage level must be high enough to carry the total generated power in the string (in the order of several tens of kV); for this reason a step-up transformer at each WTG is necessary to adapt generator and feeder voltages. In

[1] TenneT, the Netherlands; w.kling@tennet.org
[2] Cesi, Italy; breseti@cesi.it, valade@cesi.it, canever@cesi.it
[3] TU Delft, the Netherlands; R.L.Hendriks@ewi.tudelft.nl

configurations with star type clustering, each turbine is directly connected to a nodal point, a platform where a transformer is installed. Here the voltage level is increased and the power is further transported to the central point. Although star clustering requires no individual step-up transformers, it does require multiple collection platforms for transformers and switchgear. Therefore in this paper only string type clustering is assumed. At the moment the most cost-effective collection voltage seems to be approximately 30 kV [2] (as an example, the Danish Horns Rev wind farm operates at a collection voltage of 36 kV).

The transmission link to the shore can be HVAC, line-commutated thyristor-based HVDC or VSC-HVDC.
The AC connection is the solution adopted mostly by existing wind farms and has the following features:

- the submarine AC cable generates a considerable reactive current due to its high capacitance (typically in the range of 100-150 kvar/km for 33 kV XLPE (cross-linked polyethylene) cables, 1000 kvar/km for 132 kV XLPE cables [3], and 6–8 Mvar/km for 400 kV XLPE cables). This reduces the active current carrying capacity of the cable and, for large distances, requires compensation devices;
- because of the high capacitance of the cable, resonances between the onshore and the offshore grid can occur, leading to distortion of the shape of the voltage;
- the AC local wind turbine grid and the main grid are synchronously coupled and all faults in either grid are noticed in the other;
- the major advantage is the low costs for substations when compared to DC solutions. On the other hand, costs for cables are higher than for DC alternatives.

The main advantages of the DC link with respect to the AC link are the following:

- the losses and the voltage drop in the DC link are very low and there is no charging current in the DC cable. There is virtually no limitation of the connection distance, only practical restraints of cable manufacturing and laying put a maximum to this distance;
- there is no resonance between the cables and other AC equipment;
- since the collection system and the main grid are not synchronously coupled, the WTG's do not contribute significantly to short-circuit currents in the main grid;
- the DC link provides faster control of active and reactive power than the AC link. Voltage source converters are able to control reactive power over the complete operation range, for 'classical' thyristor-based HVDC this is somewhat limited. This control capability makes it easier to comply with connection requirements.

The thyristor-based HVDC solution is a technology that has proven itself on land but seems not particularly well suited for offshore applications. Converter stations and auxiliary equipment have demanding space requirements [2], that will lead to enormous offshore converter platforms. Moreover this technology is highly susceptible to AC network disturbances (resulting in commutation failures in the inverter station), which can cause a temporary shutdown of the HVDC system; for these reasons this technology has not been considered further in this paper.
On the contrary HVDC technology based on VSC's seems to be very promising for offshore applications because it requires less auxiliary equipment and the converters themselves take less space than the thyristor-based version. The VSC's are able to independently control both the active and reactive power exchanged with the AC grid and therefore they can take part in voltage regulation. The major drawback of this technology is the high converter losses, caused mainly by switching losses that depend on the switching frequency of the semiconductor devices.

III. Operational Analysis of the Connection Options

The main goal of the operational analysis is to assess the yearly system losses and to determine the rating of the compensation devices required for the AC cable connection to the shore.

For evaluation of the losses, the yearly energy production of the wind farm has been taken into consideration, starting from the wind speed distribution function. A Rayleigh distribution function is assumed and the resulting yearly production curve has been simplified to 18 operational points. The resulting equivalent yearly full-load time is approximately 3820 hours (resulting in an average capacity factor of 43.6%) in the North Sea area near the Dutch coast.
For the different connection solutions the losses in cables, transformers, reactors and converters have been taken into consideration. All AC and DC cables are assumed to be with XLPE insulation and their parameters, used for the loss calculations, have been taken from [4] and [5]. For transformers the losses in the windings and the core have been considered: the latter are supposed to be constant. For shunt compensation reactors the losses are assumed to be independent of the actual power production and they have been evaluated assuming a quality factor of 200.
The losses in the converters have been assessed assuming three-level NPC (Neutral Point Clamped) converters, whose efficiency is larger than 98% at full-load operating condition [6]. The transformer, switching and conduction losses in the converter valves have been modelled as reported in [7] and Figure 1 is obtained from it. The losses in the connection transformers have been evaluated as for the other

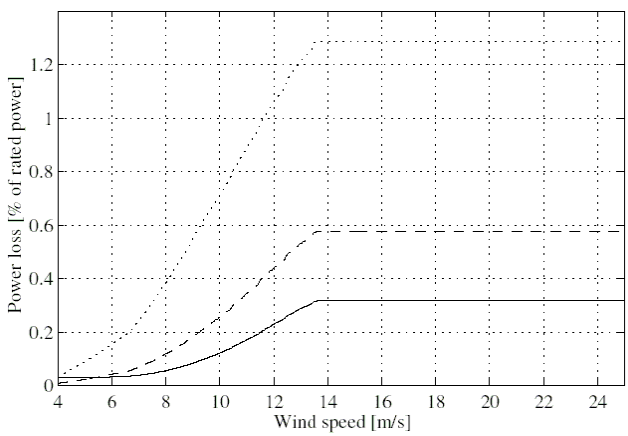

Figure 1 Values of converter losses (solid) , switching losses (dotted) and conduction losses in percent of the rated power of the converter [7]

transformers.

The technical-economical analysis has been carried out for three different sizes of wind farms: small-size (100 MW), medium size (100+100 MW) and large size (250+250 MW). For all the cases the wind farm is assumed to be located 60 km off the shore.

For the 100 MW case, AC connection through a 150 kV cable (Figure 2a) and DC connection through ±150 kV VSC-HVDC (Figure 2b) have been considered.

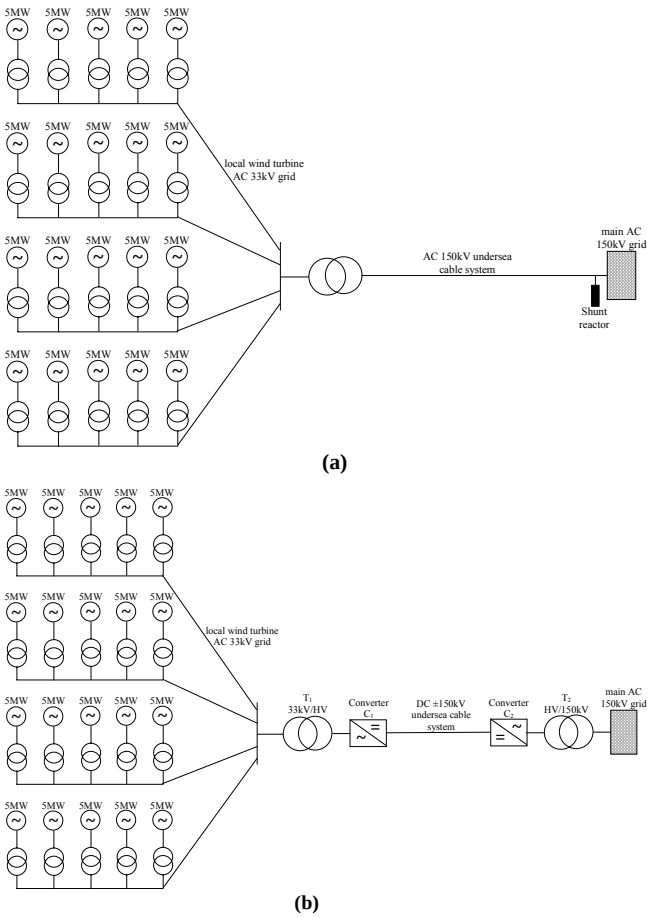

Figure 2: The electrical system for the AC (a) and DC (b) connection of the 100 MW wind farm

In Table 1 the electrical characteristics of the WTG's step-up transformers and the distribution transformer are reported.

In Table 2 the properties of the AC and DC power cables are summarized.

The reactive power produced by the 150 kV AC cable is absorbed onshore in a fixed reactor of 52 Mvar, the average between the cable's reactive power production at no load and at full-load.

For the VSC based HVDC connection the conversion stations are rated 120 MVA, while the capacity of the DC amounts 140 MW in order to adopt a cable already available in the manufacturer's datasheet. The voltage level of the AC section of the converter does not have a considerable influence on the power losses and therefore has not been optimised.

For the 200 MW case also connection through an AC cable system and VSC-HVDC have been considered. The AC configuration (Figure 3) is obtained by mirroring the arrangement used for the 100 MW case and using a three winding transformer instead. The compensation reactor for the AC connection is rated 70 Mvar, while the VSC stations of the ±150 kV HVDC link are rated 240 MVA.

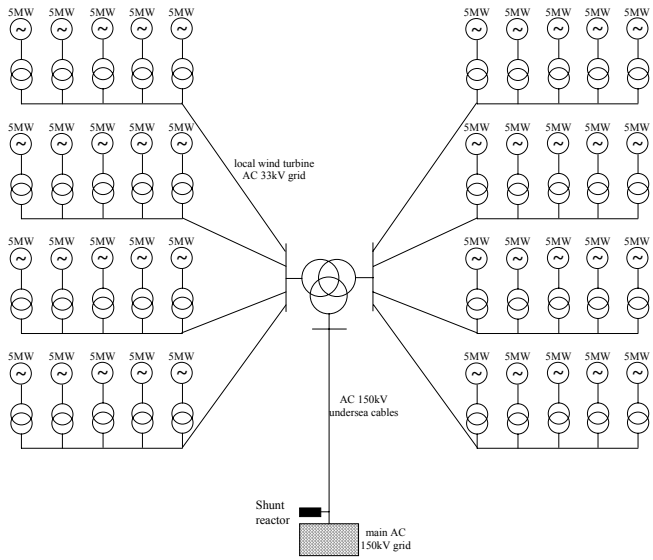

Figure 3 The electrical system for the AC connection of the 200 MW wind farm

Transformer characteristics		Step-up transformer	Connection transformer (AC solution)	Transformer T_1 (HVDC solution)	Transformer T_2 (HVDC solution)
Rated power	MVA	6.5	120	120	120
Voltages	kV	5/34	34/150	34/HV	HV/150
Short circuit impedance	%	10	12	12	12
Short circuit losses	kW	46	400	400	400
Exciting current	%	1	1	1	1
Core losses	kW	7.8	100	100	100

Table 1: Electrical characteristics of the step-up and connection transformers

Cross section	Type	Rated voltage	Current rating (at 65°C)	DC resistance (at 20°C)	Inductance	Capacitance	Dielectric losses	Charging current
mm^2		kV	A	Ω/km	mH/km	μF/km	W/km	A/km
AC cables								
95	three-core	33	250	0.193	0.38	0.17	11.6	0.90
150	three-core	33	315	0.124	0.36	0.2	13.7	1.10
240	three-core	33	410	0.0754	0.33	0.23	15.7	1.30
300	three-core	33	460	0.0601	0.32	0.25	17.1	1.40
400	single-core	150	595	0.0470	0.6	0.15	212	4.10
DC cable								
240	DC, copper	±150		0.0754				

Table 2: Electrical characteristics of the cables

For the 500 MW case three configurations have been considered: AC connection with two 150 kV links (see Figure 4a), AC connection with one 400 kV link and DC connection with two ±150 kV VSC-HVDC links.

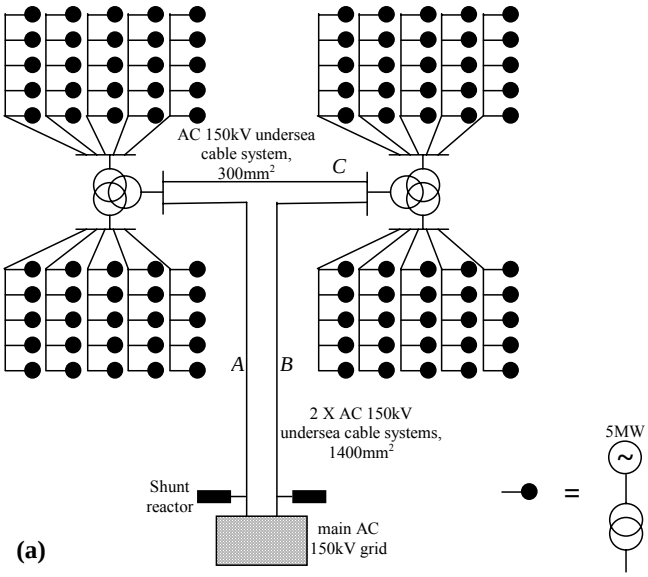

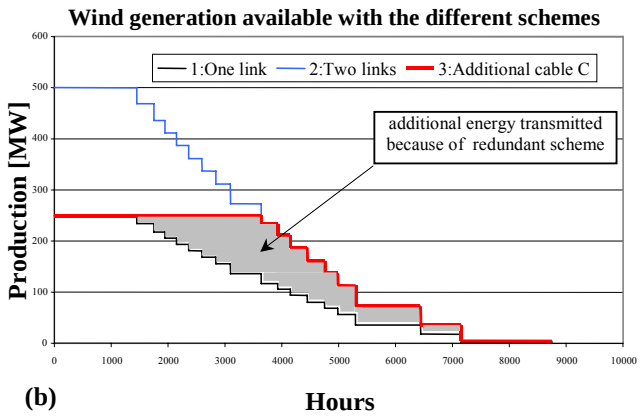

Figure 4 The electrical system for the AC connection of the 500 MW wind farm through two 150 kV undersea cable systems (a) and the power transmitted to the shore (b)

In the 150 kV AC configuration, each connection to the shore is rated the maximum power produced by an half of the wind farm (250 MW); nevertheless the cable system *C* between the two halves has been installed to improve reliability; this is cost-effective only if the expenses of this connection are lower than the net present gain obtained by increasing the energy production. The increase of energy production has been evaluated taking into consideration the yearly production curve of the wind farm (reported in Figure 4b in presence and absence of the cable system *C*) and the unavailability of the cable connection to the shore: it resulted that this option is cost-effective if the fraction of time during which one of the two cables to the shore is out of service is larger than 0.0113.

A single 82 Mvar onshore reactor is connected to each of the two 150 kV AC links while for the 400 kV connection the compensation of reactive power is obtained with two fixed reactors, the one placed on the offshore substation and the other onshore. The offshore reactor is rated to absorb 240 Mvar, equal to half the total reactive power generated by the cable at no-load, while the onshore reactor is rated 222 Mvar, equal to the average of the maximum and minimum reactive power supplied by the cable in the direction of the shore when the offshore reactor is in service. The DC connection of the 500 MW wind farm consists of two ±150 kV VSC-HVDC links, each of them rated 250 MW and connected to the 150 kV AC grid. Also in this case a 150 kV AC cable connecting the two halves of the wind farm has been considered.

The yearly total energy losses in the electrical system between the WTG's and the connection point to the main grid have been evaluated and are reported in Table 3 (both absolute figures and the percentage relative to the total energy produced by the wind farm). The yearly variable energy losses have been computed at each of the 18 operational points of the power curve, while the yearly constant energy losses are assumed to have an operational time of 8400 hours. For all the case studies the losses of the VSC-HVDC alternative are higher than of the AC alternative: this is mainly due to the high losses in the converters.

Case	Transmission type	Yearly variable energy losses		Yearly constant energy losses		Yearly total energy losses	
		MWh	%	MWh	%	MWh	%
100 MW	AC	8923	2.33	4444	1.16	13367	3.49
	DC	20482	5.36	2993	0.78	23475	6.14
200 MW	AC	14739	1.93	7158	0.94	21897	2.87
	DC	39220	5.13	5482	0.72	44702	5.85
500 MW	AC 150kV	36142	1.89	17264	0.90	53406	2.79
	AC 400kV	28962	1.51	30173	1.58	59135	3.09
	DC	98054	5.13	13387	0.70	111441	5.83

Table 3: Yearly energy losses for the case studies

IV. Economic Evaluation of the Connection Options

In order to compare the different configurations proposed, the costs of investment, maintenance, energy losses and energy not supplied have been considered.

The investment costs regard: the 33 kV AC offshore grid cables and their installation, the HV cables connecting the wind farm to the shore and their installation (AC or DC), the transformers, the converters, the AC switch gear, the reactors and the support structure of the offshore platform. These costs have been estimated by the equations taken from [7].

The cable installation costs depend on several parameters (among which laying technology, presence of existing infrastructures, mechanical protection required), therefore only the rough approximation of 50 kEUR/km for each offshore cable independent of the voltage level is applied.

The economic evaluation of the maintenance has been limited to the HV section of the transmission system (submarine cables and substations). Cable maintenance costs have been estimated equally for both AC and DC transmission at 200 kEUR/year for all cable systems. The yearly maintenance costs of the substations have been assessed at 0.4% of the total investments for the transmission link.

According to a new Dutch governmental scheme that grants a fixed subsidy per produced kWh by wind energy for ten years and to a maximum of 18000 full-load hours [8], the economic evaluation of the losses are 97 Euro/MWh for the first five years and 40 Euro/MWh for the following years.

The costs due to the energy not supplied can be estimated through a reliability analysis of the transmission system. The 33 kV AC collection system has been considered always available and therefore only the link to the shore has been taken into consideration.

The following reliability data have been adopted for the equipment that constitutes this link:

- the same availability has been considered for the DC and AC HV cables. It has been assumed that during the lifetime of the connection (supposed to be 20 years) each cable system can experience one failure that causes it to go out of service. A mean repair time of 30 days is assumed;
- the failure rate of the distribution transformer, independent of its voltage (150 or 400 kV) and power rating, is $3.44*10^{-2}$ $year^{-1}$ and the mean repair time is 21 days [9];
- for the VSC based HVDC it is not yet possible to define the reliability figures on the basis of the operating experience. In this work an availability of 99% for each conversion station (including the power electronic converters, the transformers, the reactors and filters, the controls and the auxiliaries) is assumed, without taking into consideration time required for maintenance.

The resulting unavailability of the transmission between the collection point and the main AC grid is, for all the case studies, reported in Table 4, together with the resulting energy not supplied to the main grid.

Case	Transmission type	Failure mode	Unavailability of the link	Energy not supplied (GWh)	
100 MW	AC	Link	0.0061	2.33	
	DC	Link	0.0241	9.22	
200 MW	AC	Link	0.0061	4.66	
	DC	Link	0.0241	18.43	
500 MW	AC 150 kV	HV AC cable	0.0082	4.95	8.73
		Transformer	0.0040	3.78	
	AC 400 kV	HV AC cable	0.0041	7.85	11.64
		Transformer	0.0040	3.78	
	DC	Conversion stations or DC cable	0.0443	26.63	30.42
		Transformer	0.0040	3.78	

Table 4: Unavailability of the transmission link to the shore and corresponding yearly energy not supplied

Case	Transmission type	Investment costs (MEUR)	Year zero losses costs (MEUR)	Year zero maintenance costs (MEUR)	Year zero costs due to energy not supplied (MEUR)	Year zero total costs	
						MEUR	MEUR/MW
100 MW	AC	60.51	10.03	5.03	1.75	77.32	0.7732
	DC	62.69	17.61	5.14	6.91	92.35	0.9235
200 MW	AC	78.86	16.43	5.43	3.49	104.21	0.5211
	DC	105.27	33.53	6.75	13.83	159.38	0.7969
500 MW	AC 150 kV	181.66	40.06	11.44	6.55	239.71	0.4794
	AC 400 kV	209.36	44.36	10.32	8.73	272.77	0.5455
	DC	260.74	83.59	15.41	22.82	382.56	0.7651

Table 5: Economic results for all the case studies

In Table 5 the results of the economical analysis are reported. The assumptions for the financial parameters are a 7% nominal interest rate, 2% inflation and an economic lifetime of the complete system of 20 years.

For all cases, the major share in total costs is formed by investments. The largest expenses for the AC solution are the high voltage cables, for the DC solution they are the investments for the converter stations. The main benefit of the DC solution is the lower costs for manufacturing and installing the cable, nevertheless in this study the savings are not high enough to counterbalance the fixed costs of the converter stations. The power losses for the VSC-HVDC connection are considerably higher than for the AC connection, due to the losses in the converters. This is mainly of influence in the 100 MW scenario. The costs due to the energy not supplied differ a lot between the two technologies because an unavailability of 1% was assumed for each converter station. When more realistic data comes available from real-world projects, this estimate could change radically; in any case these costs do not have a big influence on the final economical assessment. On the whole, for all the case studies the VSC-HVDC solution is more expensive than the AC solution.

In the 100 MW case, for which the costs of the two transmission technologies differ only slightly, the influence of the turbine type on the economic results has been examined as well. The costs of the wind turbines are according to [10]: a price of 889.3 EUR/kW has been adopted for constant speed turbines and a price of 950 EUR/kW for variable speed turbines. The economical advantage resulting from the use of the constant speed WTG's in the DC solution is not enough to equal out the higher costs of this type of transmission system. In fact the AC solution, whose generation and transmission total costs are 172.32 MEUR, is slightly cheaper than the VSC-HVDC solution, whose total costs amount 181.28 MEUR.

V. System Consideration about the Wind Farm Connection

A short-circuit analysis has been performed to evaluate the geographic extension of voltage dip areas for different locations of faults.

A provisional model of the Dutch electrical power system for the year 2020 is considered with a total installed wind power of 6000 MW offshore and planned network reinforcements in the Randstad region were included (source TenneT). The equivalent short-circuit power at the border with Germany and Belgium is obtained from the UCTE short-circuit calculation for 2003.

The offshore wind farms are expected to be connected at the 380 kV substations Maasvlakte and Beverwijk near the coast, assuming in this study the connection of 3000 MW at either substation.

Bolted three-phase faults have been applied at all buses in the high voltage network and for every fault the resulting voltage profile in the network has been evaluated. Only faults leading to a voltage lower than 80% of the rated value in the wind farms connection nodes have been studied in greater detail. This is a common value for the setting of the undervoltage protection of existing WTG's [11], below this threshold the turbines switch off. This can lead, in presence of a large amount of wind generation, to severe conditions in the system. The undervoltage protection's main task is to prevent the WTG from damage due to high currents.

When all faults that lead to a voltage in the equivalent wind farm connection points below 0.8 pu are considered a cause of wind generators deactivation, a list of ten critical fault locations has been obtained.

Putting, for example, the results of a three-phase fault in Diemen in a graphical representation (see Figure 5), it can be noticed that the voltage dip area is funnel-shaped in the neighbourhood of the fault location. In the map the post-fault voltage profile is indicated by four differently coloured areas covering points with an equal post-fault voltage (V_{pf}); from the figure it can be concluded that in this case the voltage in Beverwijk falls below 45% of the rated value and in Maasvlakte below 80%. For the other critical fault locations in the grid similar figures have been drawn.

This analysis shows that for nine of the ten critical faults the complete offshore wind production could be lost because of undervoltage protection; for the remaining fault, in Diemen, the connection points of Maasvlakte reach the voltage limit of 0.80 pu, so the situation is also potentially critical.

Closer examination of the maps shows that the regions where voltage drops below 0.45 pu remain rather limited, while on the contrary the area in which the voltage is between 0.45 and 0.8 pu can cover more than half of the country. If we perform the same simulations with conventional generation connected to Maasvlakte and Beverwijk instead of wind farms the results confirm a significant reduction of the geographic extension of the voltage dip areas.

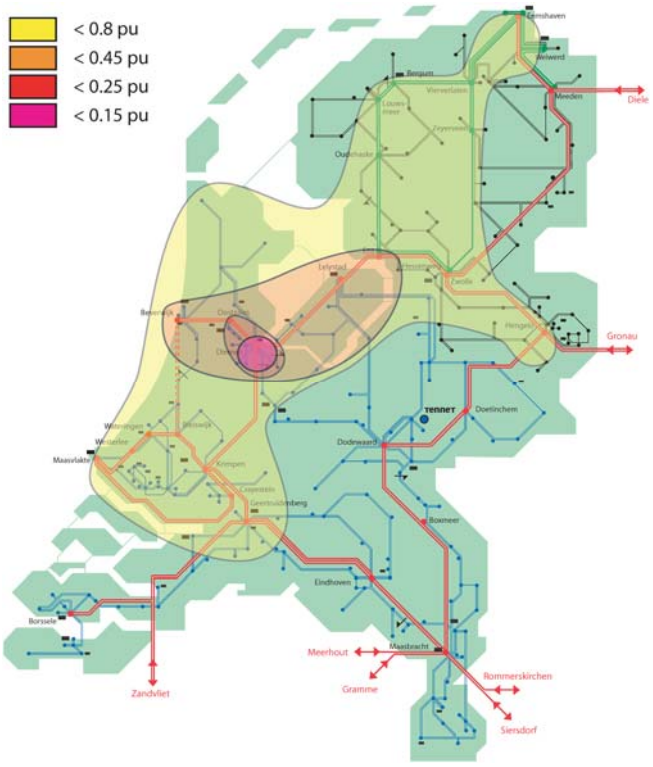

Figure 5 Extension of the voltage dip caused by a three-phase fault in Diemen

For the moment only a single scenario (maximum load) has been analysed. In order to obtain a more profound analysis further investigation is necessary, both additional static scenarios (at different load and generation levels, taking into account the network topologies at sea and on land, initial voltage profile, etc.) and dynamic simulations of the behaviour of wind farms with an accurate representation of the protections system.

VI. Conclusions

In this paper a detailed technical-economical analysis has been carried out for three different sizes of wind farms (100 MW, 200 MW and 500 MW) connected to the shore with three different transmission solutions (150 kV AC, 400 kV AC and ±150 kV VSC-HVDC). For all scenarios it appeared that the losses for the VSC-HVDC connection are considerably higher than for the AC alternatives. The HVDC solution is also more expensive, not only because of the energy losses but mainly of the higher total investment costs at the considered connection distance of 60 km.

A static short-circuit analysis has been performed to verify the effects of large-scale offshore wind power generation on the security of the network and in particular on the geographic extension of voltage dips and the resulting risk of disconnection due to the post-fault voltage profile. This hypothesis of increased risk has been confirmed.

VII. Acknowledgment

The work presented in this paper has been performed in the 5th European Framework Research and Development Program "Benefits of HVDC Links in the European Power Electrical System and Improved HVDC Technology" (contract N°ENK6-CT-2002-00670). We thank the "HVDC" consortium for permission to publish.

VIII. References

[1] J.G. Slootweg, W.L. Kling, L. van der Sluis, S.W.H. de Haan, Integration of large scale wind parks in the Dutch power system: a comparison of the behaviour of constant and variable speed wind turbines, Cigré Session 2002, Paris, Paper 14-201;

[2] T. Ackermann, Transmission systems for offshore wind farms, IEEE Power Engineering Review, December 2002;

[3] S. D. Wright, A.L. Rogers, J.F. Manwell, A. Ellis, Transmission options for offshore wind farms in the United States, 2002; [Online] Available: http://www.ecs.umass.edu;

[4] XLPE Cable Systems, brochure ABB;

[5] HVDC Light, Submarine and Land Cables, brochure ABB;

[6] B.D. Railing, J.J. Miller, P. Steckley, G. Moreau, P. Bard, L. Ronström, J. Lindberg, Cross Sound Cable project, second generation VSC technology for HVDC, CIGRE 2004;

[7] S. Lundberg, Performance comparison of wind park configurations, Technical Report No. 30R, Department of Electric Power Engineering, Chalmers University of Technology, 2003;

[8] IEA Wind, "Annual Report 2003". [Online] available on www.ieawind.org;

[9] J. Bozelie, J.T.G. Pierik, P. Bauer, M. Pavlovsky, Dowec grid failure and availability calculation. [Online] available on www.ecn.nl/docs/dowec;

[10] Offshore wind energy ready to power a sustainable Europe, Report Duwind 2001.006, December 2001;

[11] Y. Sassnick, M. Luther, R. Voelzke, "Influence of increased wind energy infeed on the transmission network", CIGRE Session 2004, Paris, Paper C6-107.

IX. Biographies

Wil Kling received his M.Sc. degree in electrical engineering from the Technical University of Eindhoven, The Netherlands, in 1978. Since 1993, he is a part-time Professor at the Electric Power Systems Laboratory, Delft University of Technology. And since 2000, also at the Eindhoven University of Technology. Furthermore he is with TenneT, the Dutch Transmission System Operator.

Paola Bresesti received her Doctorial Degree in EE from University of Pavia, Italy, in 1991. She joined CESI in 1991 where she currently is the Head of the Network Study Unit in T&D Network Department.

Daniele Canever graduated in Electrical Engineering from the University of Genoa in 2000. After a brief experience with Centre for Electrical Power Engineering of Strathclyde University (Scotland), he joined the T&D Network Department of CESI (Italy) in 2001.

Ivan Valadè received his Doctor of Electrical Engineering Degree in 2003 from Politecnico di Milano, Italy. He joined CESI in 2004, where he currently works in the area of power system analysis for the Transmission & Distribution Network Department.

Ralph Hendriks received his B.Sc. in electrical engineering in 2003 and is now a final-year M.Sc. student at Delft University of Technology. In September 2005 he starts working on a Ph.D. research at DUT.