Transmission systems for offshore wind farms in the Netherlands

Wil Kling - TenneT
Paola Bresesti, Ivan Valadè, Daniele Canever – Cesi
Ralph Hendriks – TU Delft

Copenhagen Offshore Wind Conference
26-28 October 2005

A case study in the framework of a EU funded study

(contract ENK6-CT-2002-00670)

Benefits of HVDC Links in the European Power Electrical System and Improved HVDC Technology

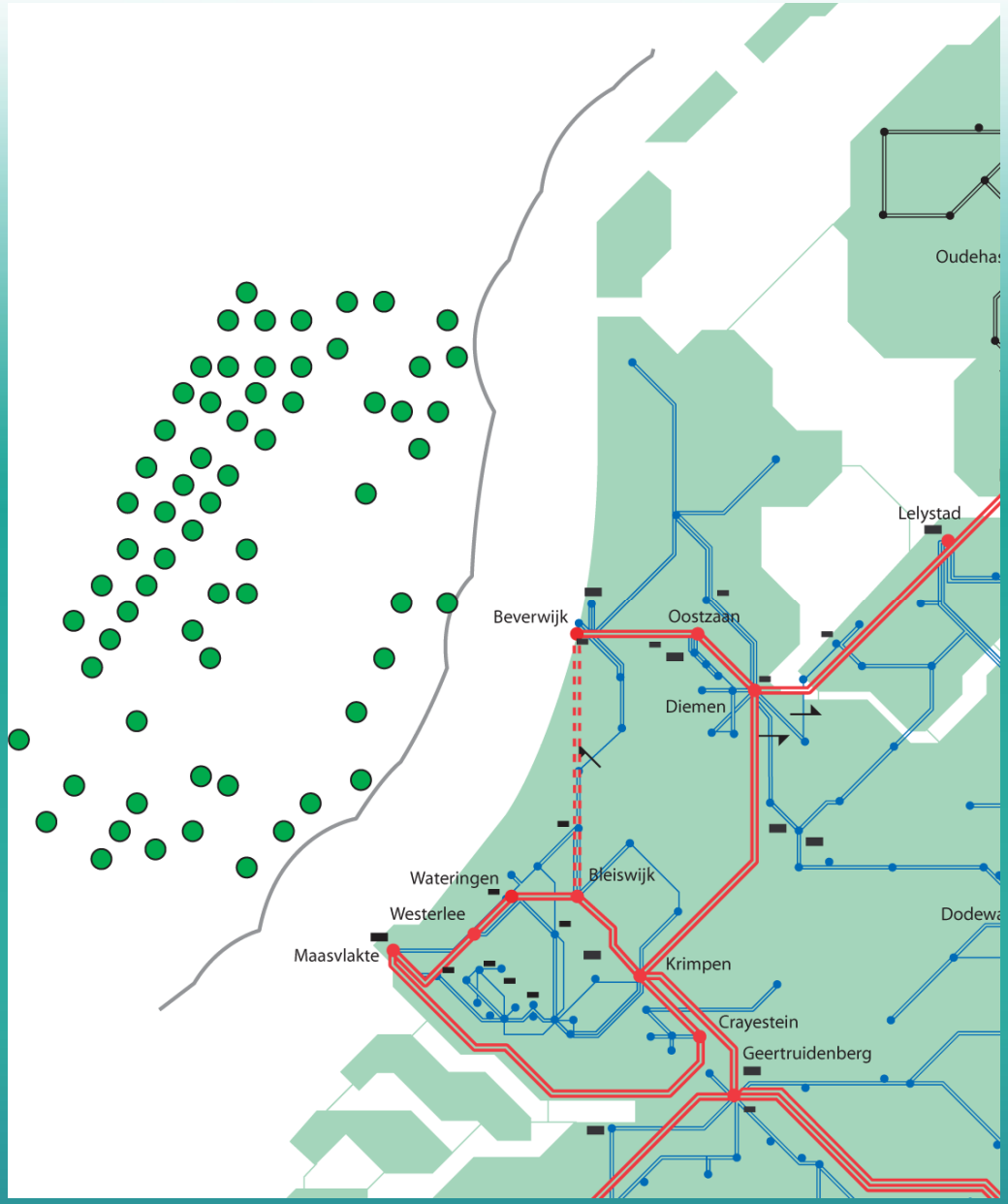
Oudeha
Lelystad
Beverwijk
Oostzaan
Diemen
Wateringen
Bleiswijk
Westerlee
Dodewa
Maasvlakte
Krimpen
Crayestein
Geertruidenberg

Connecting wind farms

- Type of wind turbine generator: constant speed or variable speed turbines
- Wind farm's collecting system: string or star clustering
- Transmission link to the main grid: AC or DC

Features of AC cable link

- Generates large amounts of reactive power leading to maximum length
- Resonances may occur between onshore and offshore grid
- Synchronous coupling: faults on either side are noticed
- Mostly least cost solution

Features of DC link

- No limitation in length
- No resonance problems
- No synchronous coupling: no contribution to the short circuit power
- Control capabilities for reactive power
- Conversion makes it costly

Wind farm options

- A small size project (100 MW)
- A medium size project (100 + 100 MW)
- A larger size wind project (500 MW)

An average distance to shore of 60 km is considered

Options for the connection to the main grid

a) 150 kV cables AC

b) 380 kV cables AC

c) VSC-HVDC systems

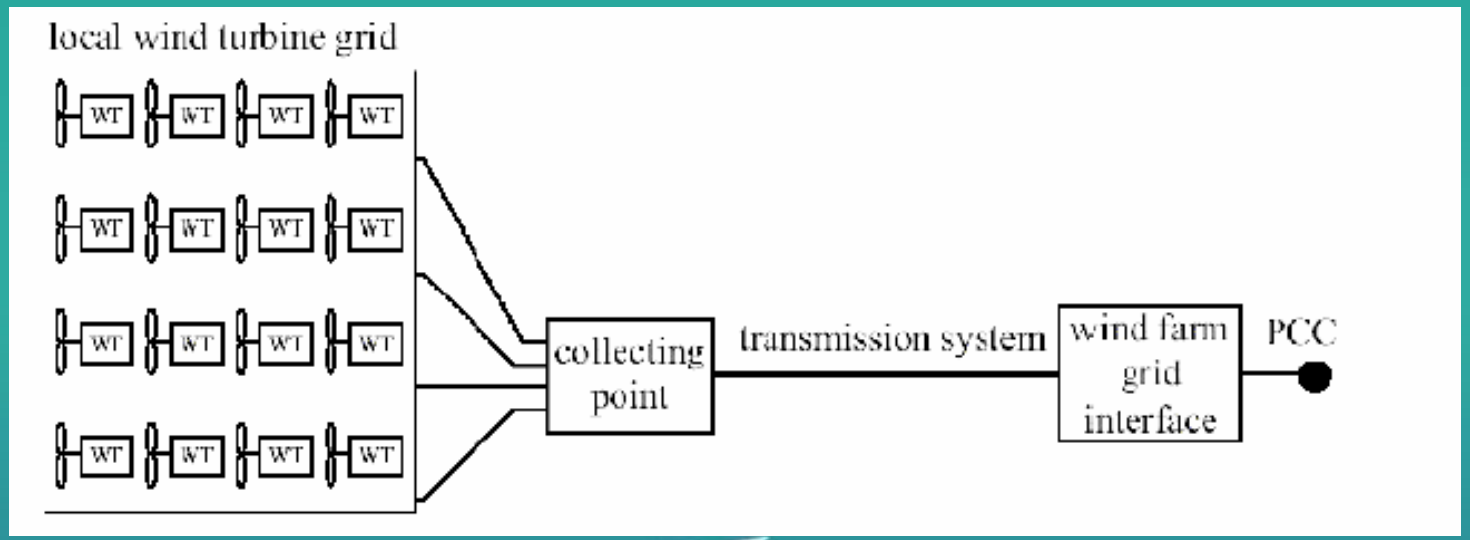

The electrical system for the AC connection of the 100 MW wind farm

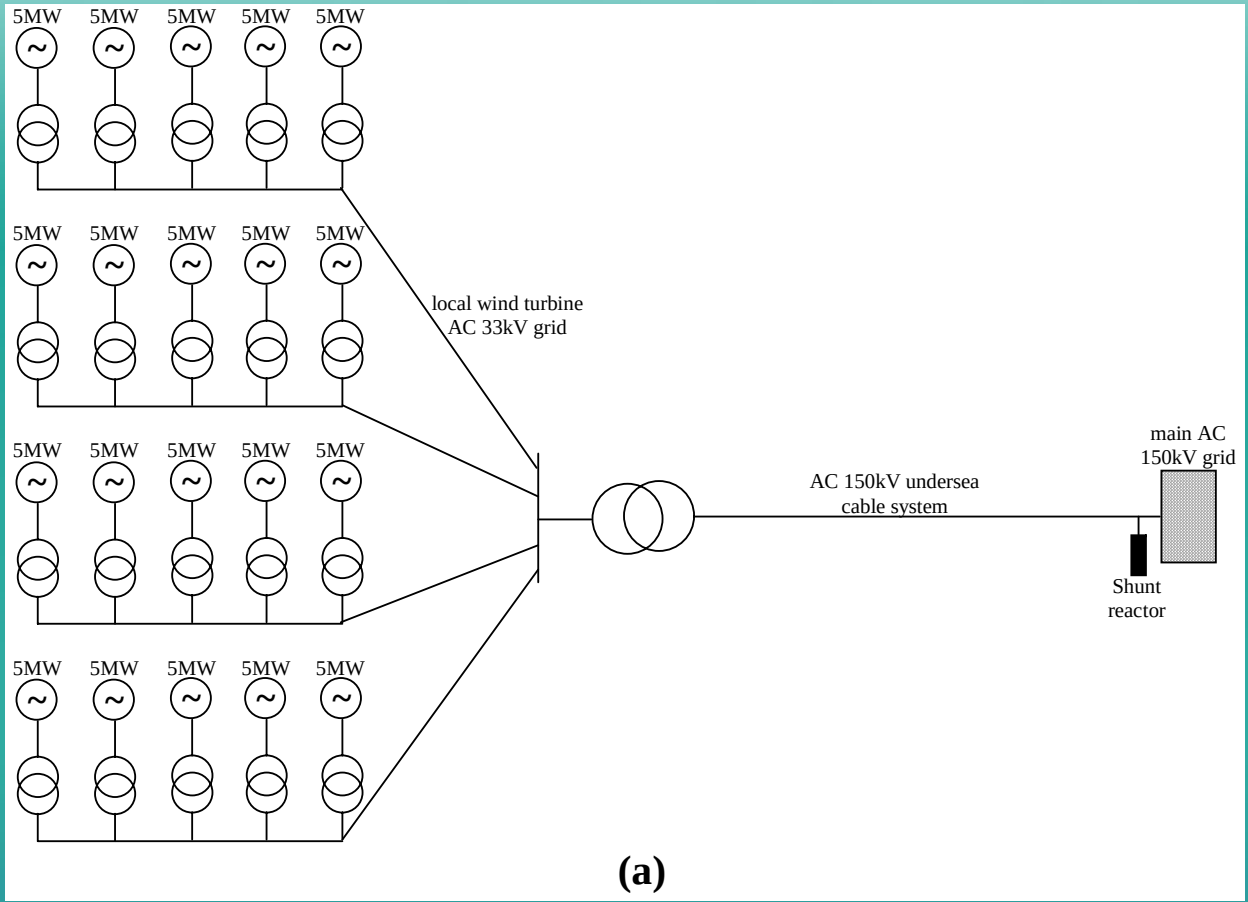

The electrical system for the DC connection of the 100 MW wind farm

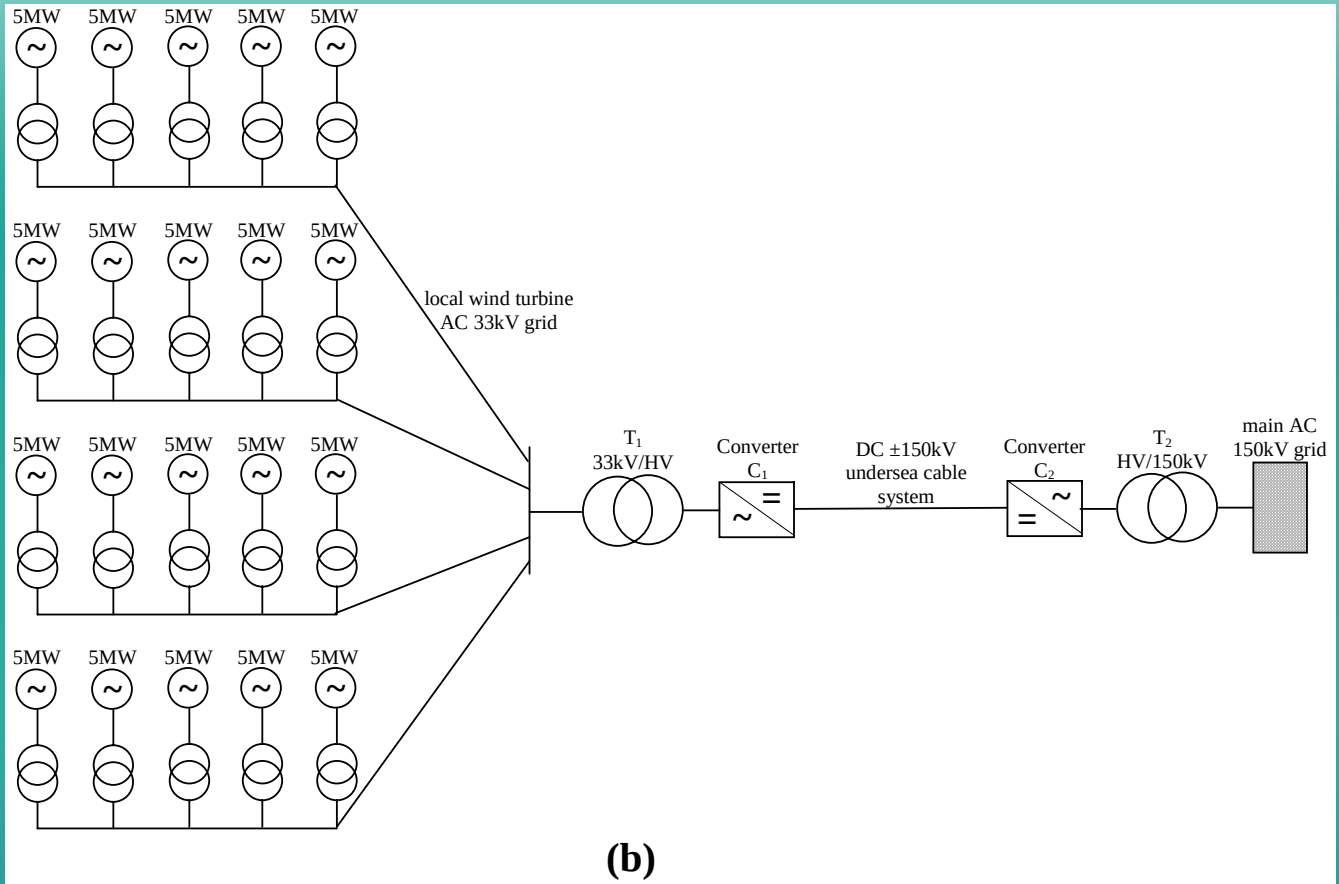

The electrical system for the AC connection of the 200 MW wind farm

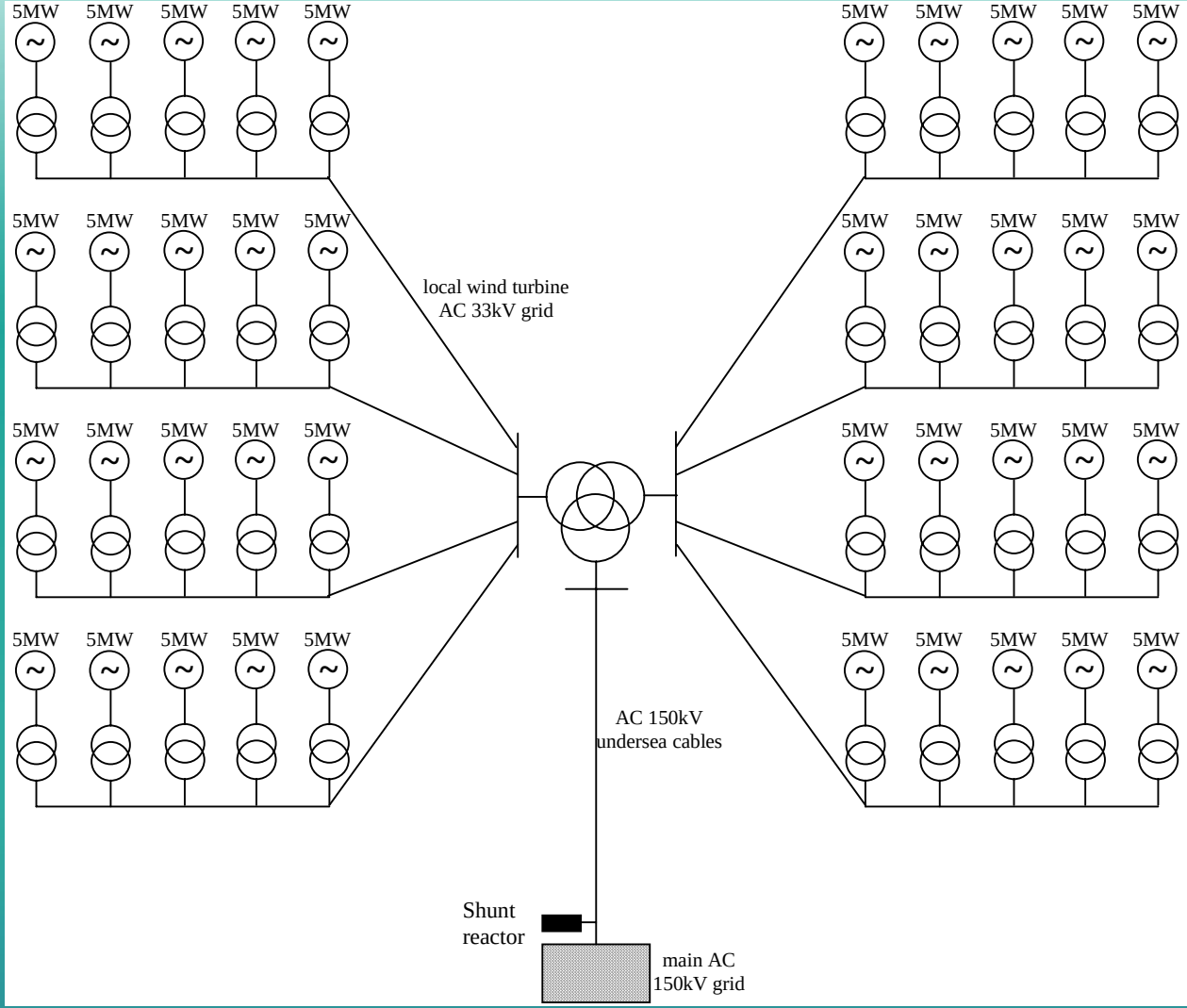

The electrical system for the DC connection of the 200 MW wind farm

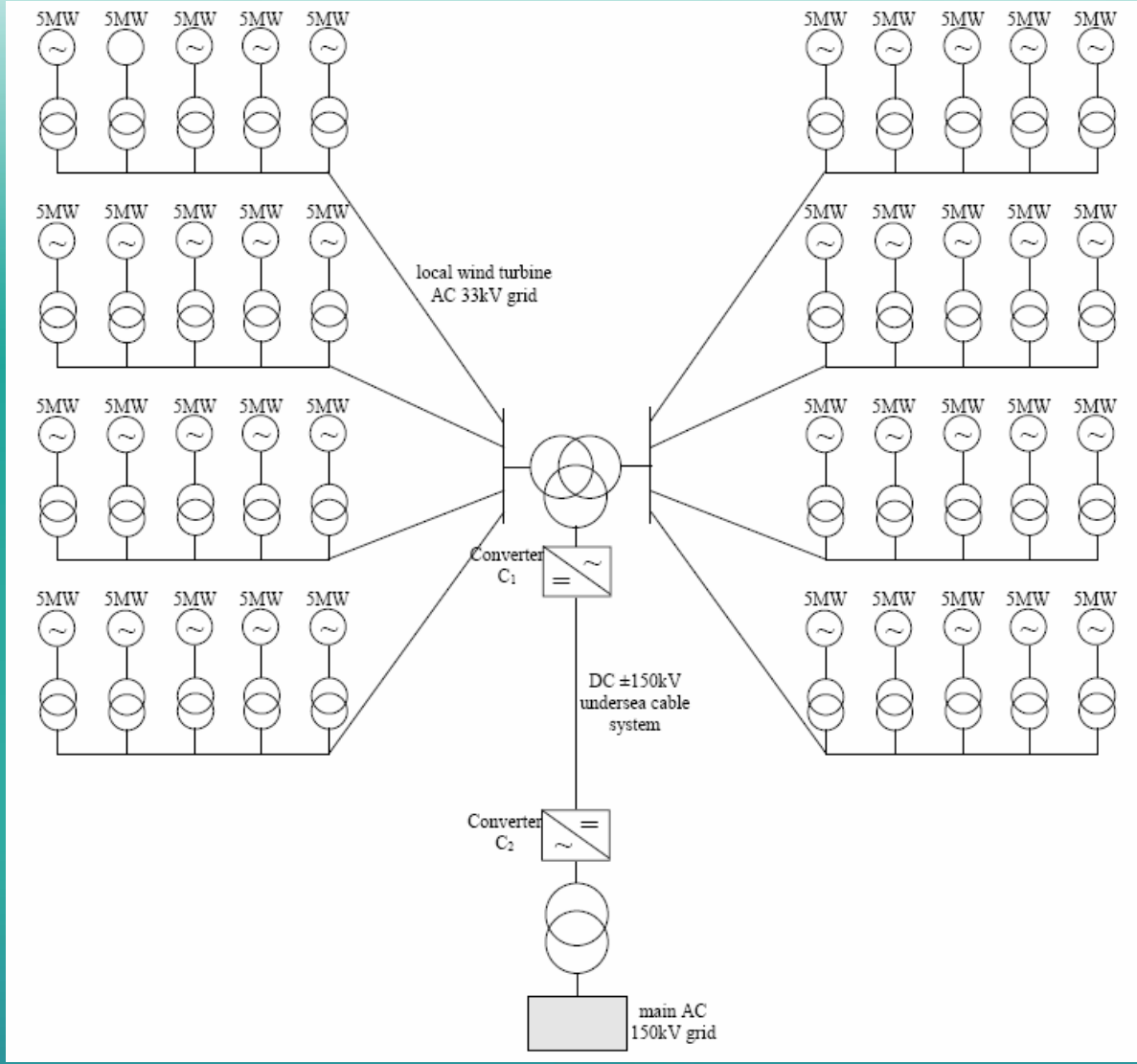

The electrical system for the 150 kV AC connection of the 500 MW wind farm

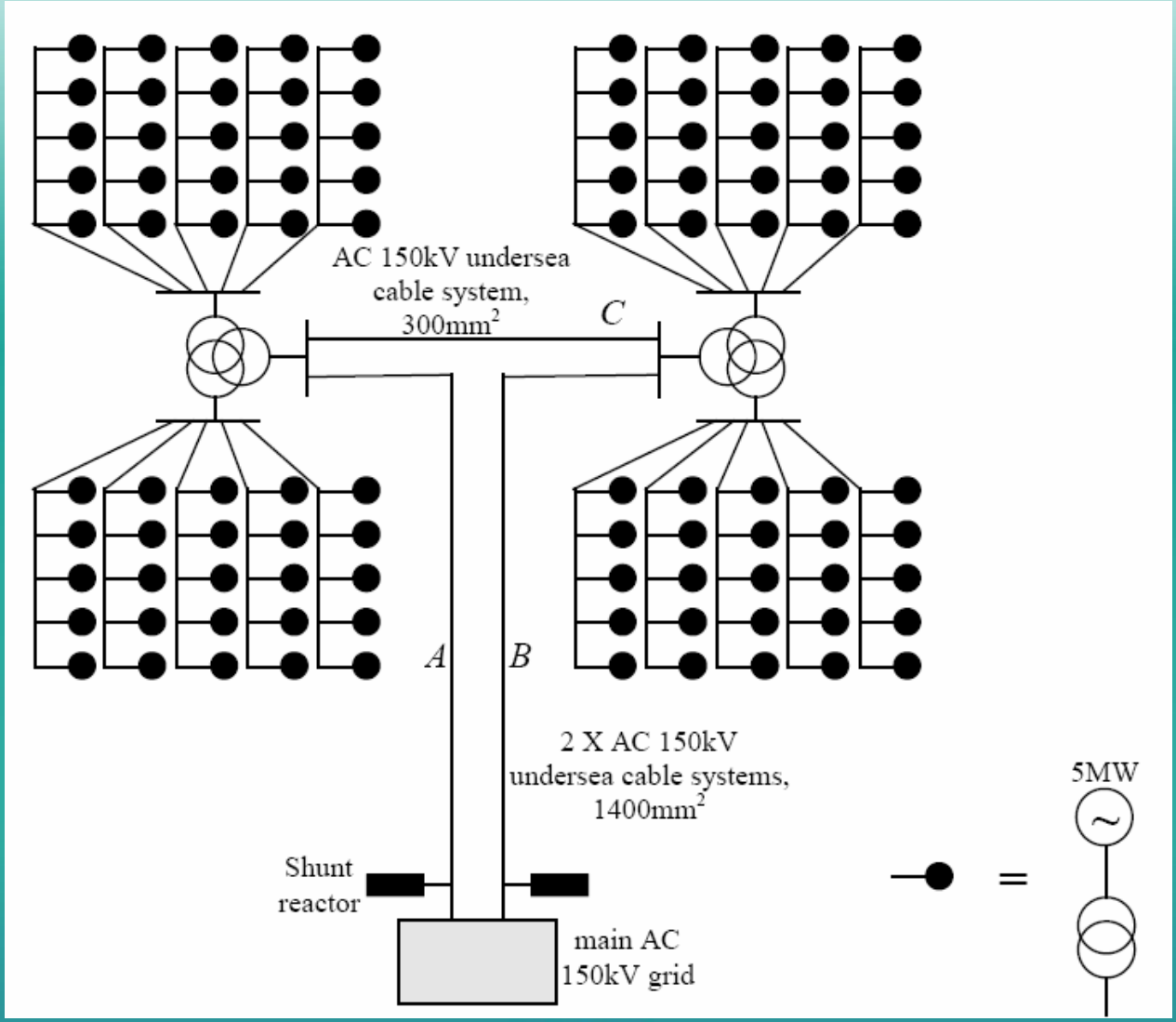

The electrical system for the 380 kV AC connection of the 500 MW wind farm

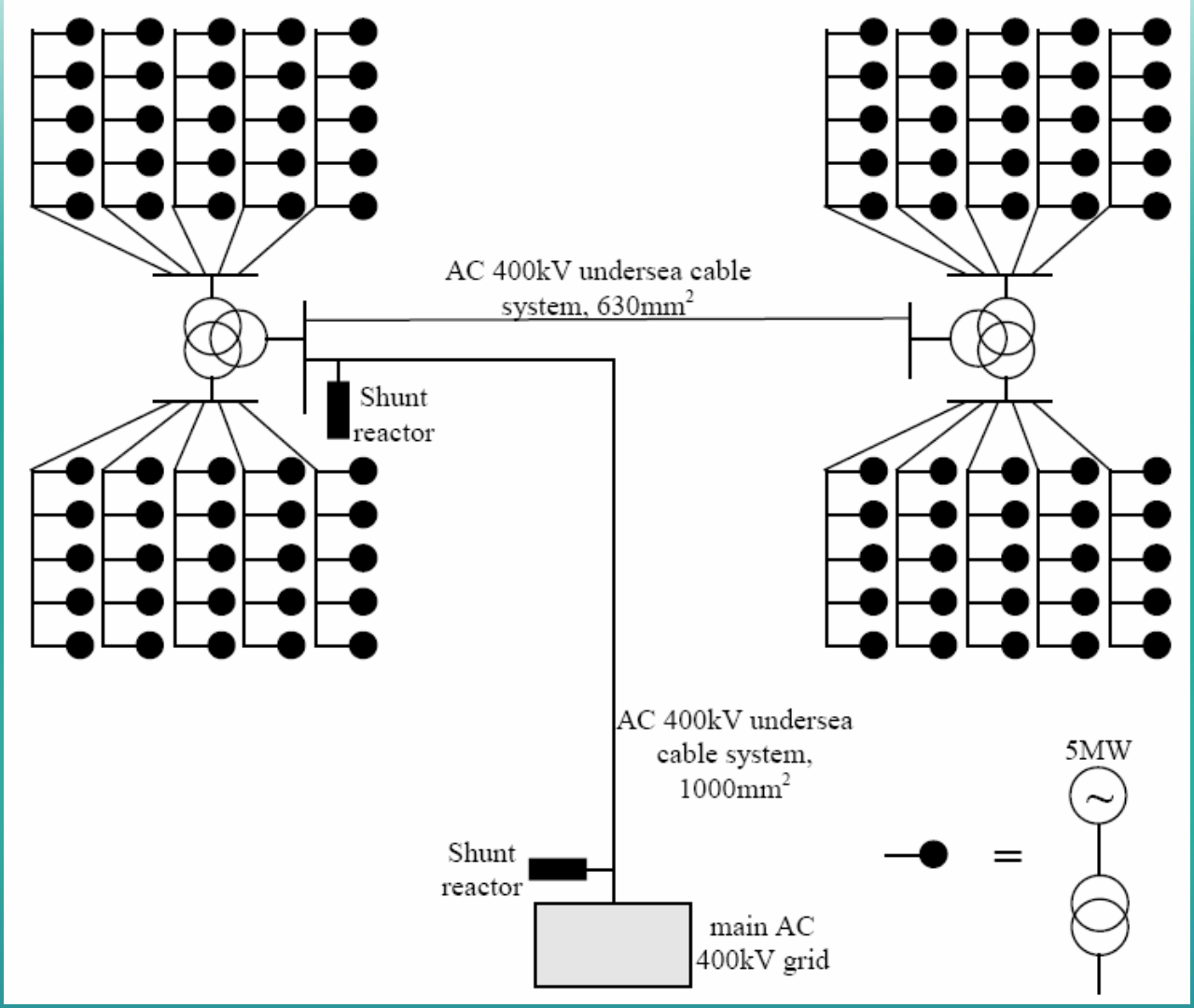

The electrical system for the DC connection of the 500 MW wind farm

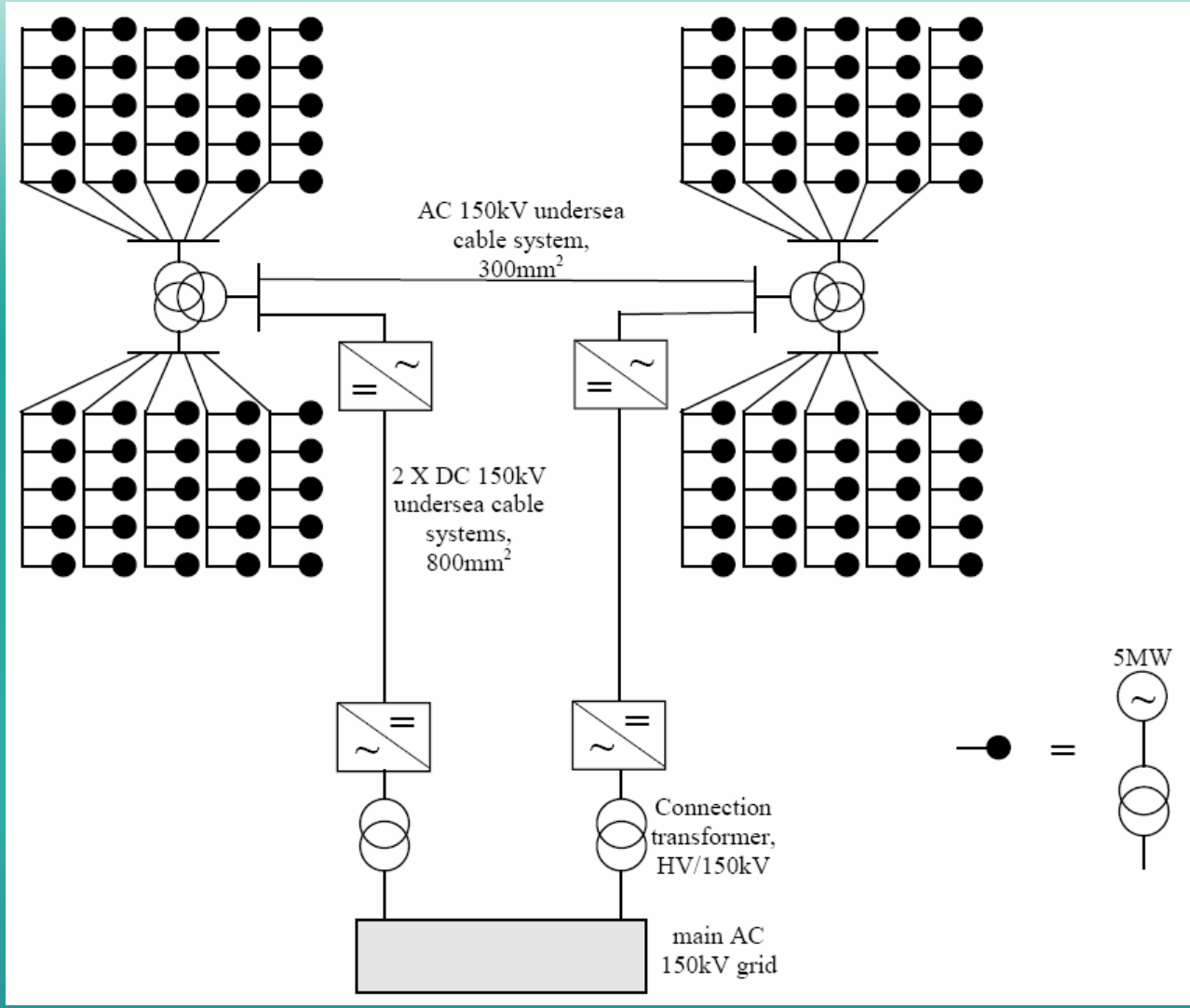

Comparison of different options for the connection to the main grid

a) Evaluation of losses in the elements of link

b) Economic evaluation of the wind farm connection options

Yearly energy losses for the different options in the case studies

Case	Transmission type	Yearly variable energy losses		Yearly constant energy losses		Yearly total energy losses	
		MWh	%	MWh	%	MWh	%
100 MW	AC	8923	2.33	4444	1.16	13367	3.49
	DC	20482	5.36	2993	0.78	23475	6.14
200 MW	AC	14739	1.93	7158	0.94	21897	2.87
	DC	39220	5.13	5482	0.72	44702	5.85
500 MW	AC 150kV	36142	1.89	17264	0.90	53406	2.79
	AC 400kV	28962	1.51	30173	1.58	59135	3.09
	DC	98054	5.13	13387	0.70	111441	5.83

Economic results for all options and cases

Case	Transmission type	Investment costs (MEUR)	Year zero losses costs (MEUR)	Year zero maintenance costs (MEUR)	Year zero costs due to energy not supplied (MEUR)	Year zero total costs	
						MEUR	MEUR/MW
100 MW	AC	60.51	10.03	5.03	1.75	77.32	0.7732
	DC	62.69	17.61	5.14	6.91	92.35	0.9235
200 MW	AC	78.86	16.43	5.43	3.49	104.21	0.5211
	DC	105.27	33.53	6.75	13.83	159.38	0.7969
500 MW	AC 150 kV	181.66	40.06	11.44	6.55	239.71	0.4794
	AC 400 kV	209.36	44.36	10.32	8.73	272.77	0.5455
	DC	260.74	83.59	15.41	22.82	382.56	0.7651

Voltage dip effects

Certain connection schemes might be vulnerable to voltage dips

This can cause disconnection of large amounts of wind power

In a strong network as in the Netherlands voltage dips of more than 20% are quite normal in an extended area

Extension of the voltage dip caused by a three-phase fault in Diemen

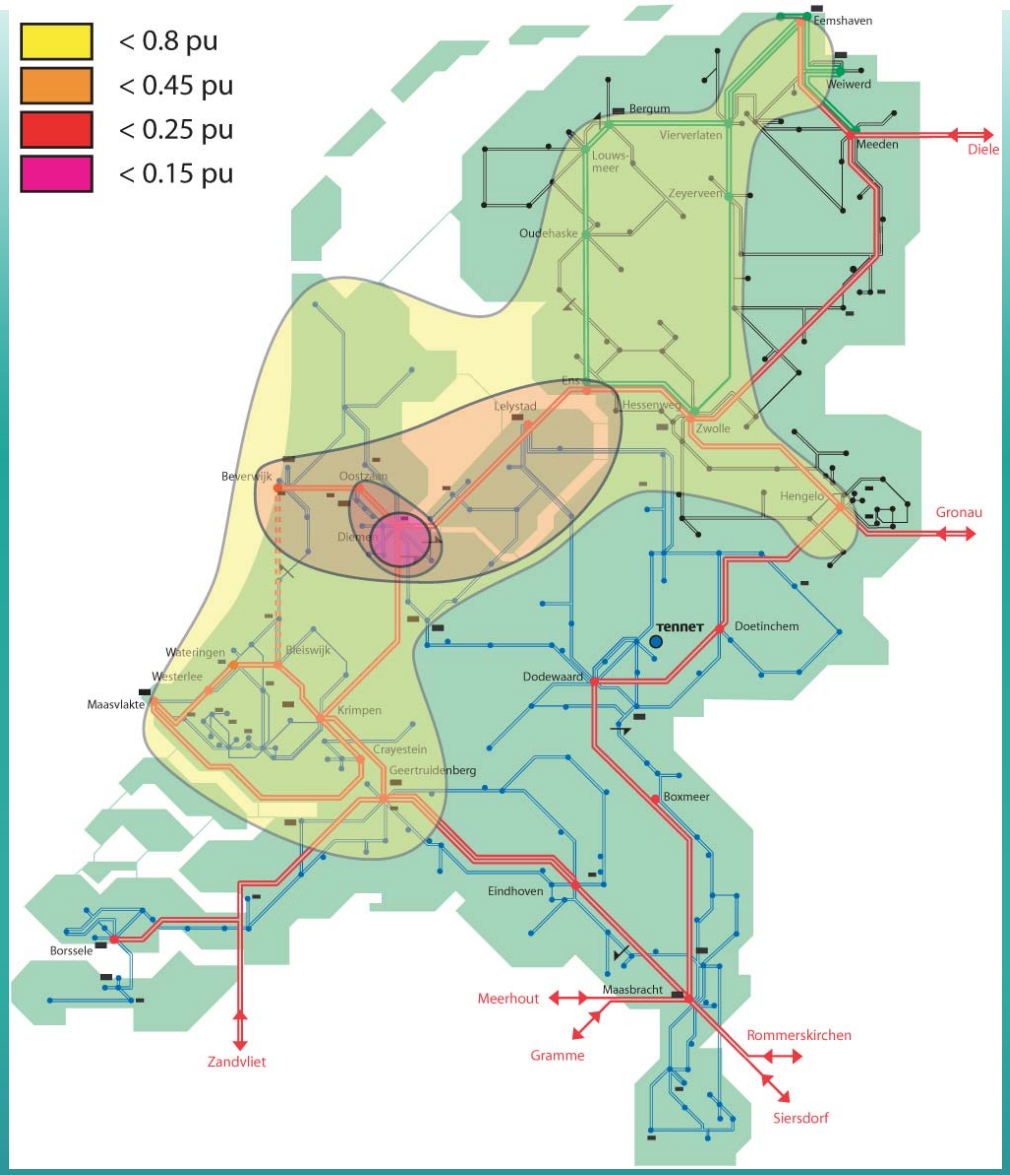

Conclusions

Different connection options for the transmission of power from offshore wind farms to the main grid are viable

Losses in VSC-HVDC schemes are considerably higher than for the AC alternatives

At the considered distance of 60 km also the investment costs of the HVDC solution are higher

Static short circuit analyses confirm the risk of disconnection of wind farms