Evaluation of Different Electrical Transmission System for Large Offshore Wind Farm

Thomas Ackermann, N. B Negra, J. Todorovic, L. Lazaridis

Royal Institute of Technology
School of Electrical Engineering
Electric Power Systems
Stockholm, Sweden

Outline

- Introduction
- Overview of Solution
- Losses
- Reliability
- Economic Analysis
- Conclusion

Country	Start	Turbines rotor/kW	Total Capacity	Distance to PCC [km]	Collector Voltage	OSS[1]	Transmission Voltage
Utgrunden, Sweden	2000	7*Enron Wind 70/1500	10,5 MW	8	AC, 20 kV	No	AC, 20 kV
Blyth, United Kingdom	2000	2*Vestas V 66/2.000	4 MW	2	AC, 11 kV	No	AC, 11 kV
Middelgrunden, Denmark	2001	20*Bonus 76/2.000	40 MW	4	AC, 30 kV	No	AC, 30 kV
Yttre Stengrund, Sweden	2001	5*NEG-Micon 72/2000	10 MW	6	AC, 20 kV	No	AC, 20 kV
Horns Rev, Denmark	2002	80*Vestas V 80/2.000	160 MW	19+33[2]	AC, 36 kV	Yes	AC, 150 kV
Samso, Denmark	2003	10*82,4/2300 Bonus	23 MW	5	AC, 30 kV	No	AC, 30 kV
Nysted, Lolland-Denmark	2003	72*Bonus 82/2300	165,6 MW	10	AC, 33 kV	Yes	AC, 132 kV
Arklow Bank, Irish Sea-Ireland	2003	7*GEW 104/3600	25 MW	10	AC, 38 kV	No	AC, 38 kV
North Hoyle, UK	2003	30*Vestas V 80/2000	60 MW	10	AC, 33kV	No	AC, 33kV
Scroby Sands, Norfolk-UK	2004	30*Vestas V 80/2000	60 MW	4	AC, 33 kV	No	AC, 33 kV
Kentish Flat, UK	2005	30*Vestas V90/3000	90 MW	9	AC, 33 kV	No	AC, 33 kV
Barrow, UK	2005	30*Vestas V90/3000	90 MW	27+3[3]	AC, 33 kV	Yes	AC, 132 KV

Description of Solutions

HVAC

Example HVAC Solution for a 600 MW Wind Farm:

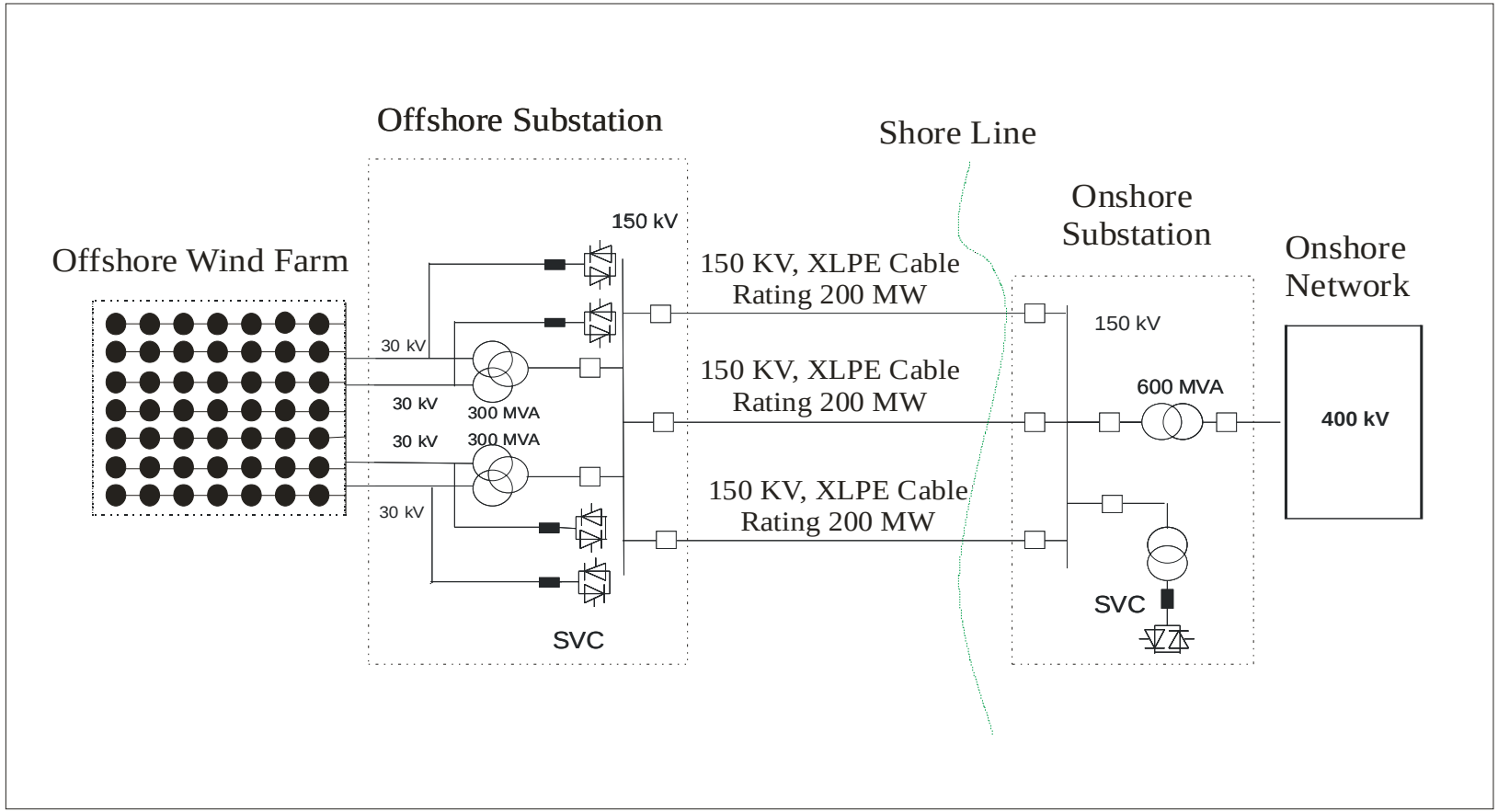

Description of Solutions

HVDC Line Commutated Converter

Example HVDC LCC Solution for a 500 MW Wind Farm:

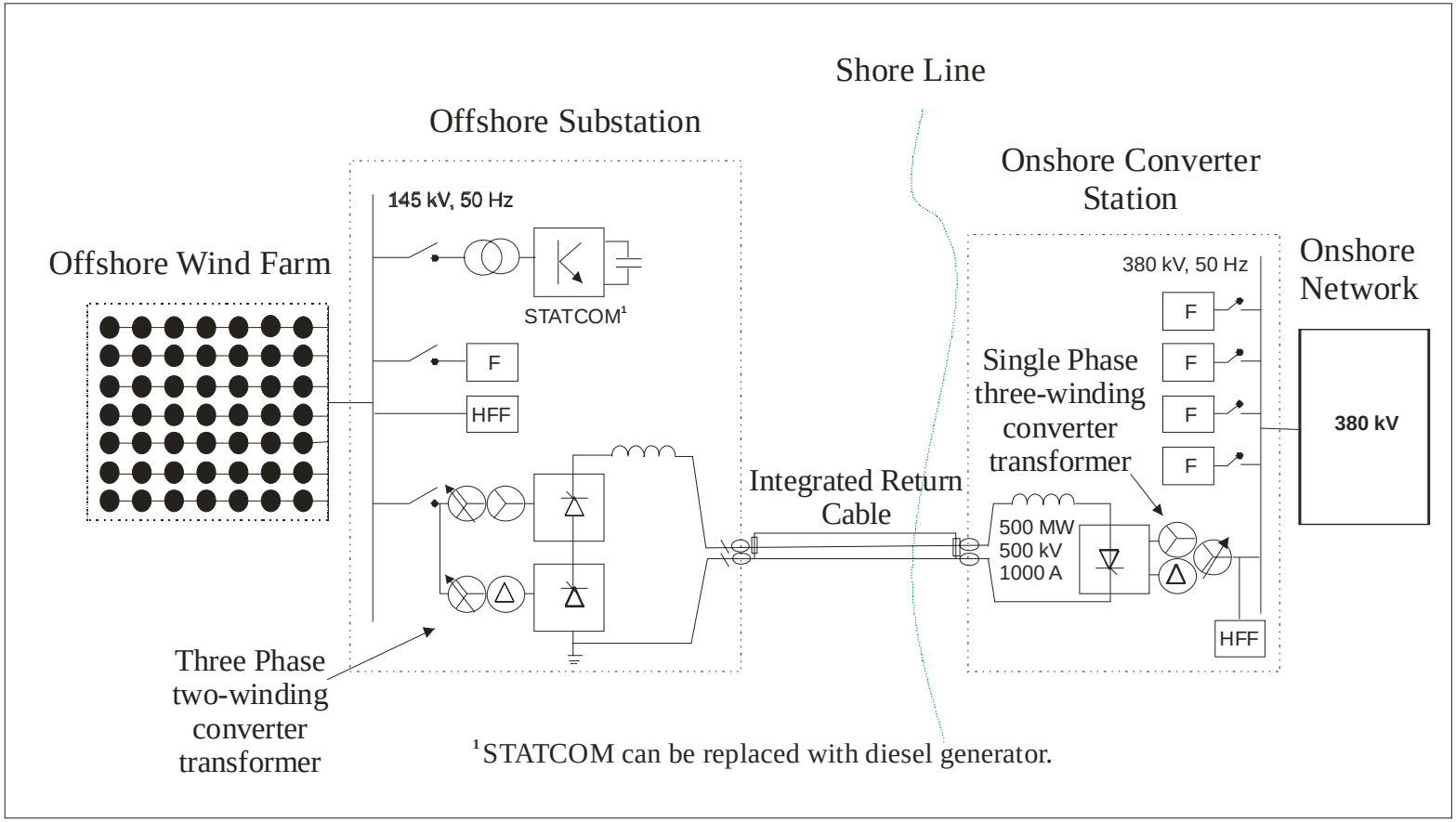

Description of Solutions

HVDC Voltage Source Converter

Example HVDC VSC 600 MW Solution:

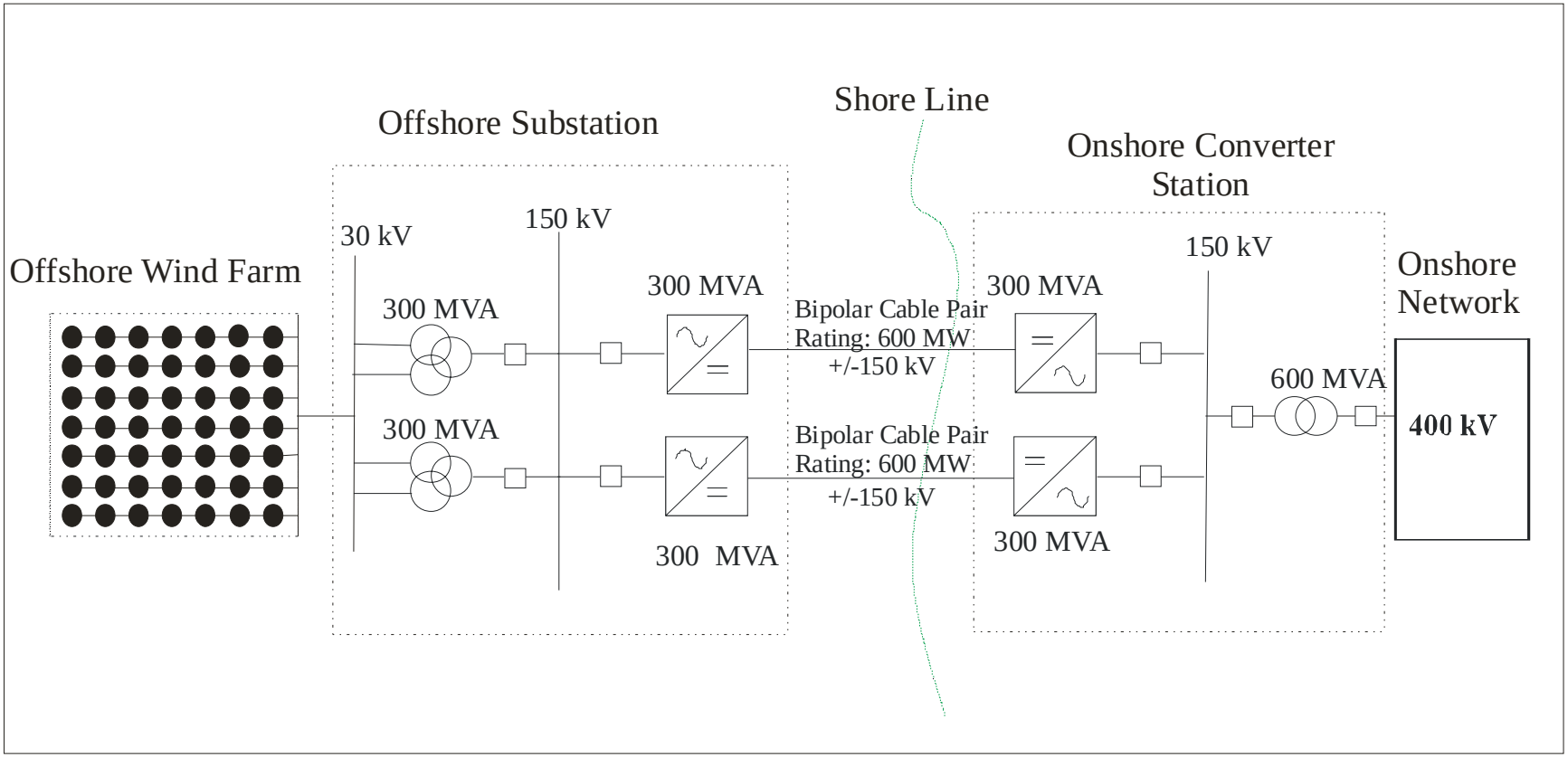

	HVAC	LCC HVDC	VSC HVDC
Maximum available capacity per System	• 200 MW at 150 kV • 350 MW at 245 kV	• ~ 1200 MW	• 350 MW • 500 MW • 1100 MW announced
Voltage Level	• Up to 245 kV	• Up to ±500 kV	• Up to ± 150 kV
Transmission capacity distance depending?	• Yes	• No	• No
Black start capability	• (Yes)	• No	• Yes
Fault Contribution?	• Yes	• Low compared to HVAC;	• Low compared to HVAC;
Technical capability for network support	• Limited	• Limited	• Large range of possibilities.
Offshore substations stations in operation?	• Yes	• No	• Yes
Space requirements offshore substation.	• Small	• Depending on capacity, larger than VSC.	• Depending on capacity. Smaller than LCC but larger than HVAC

Loss Calculations – HVAC Systems

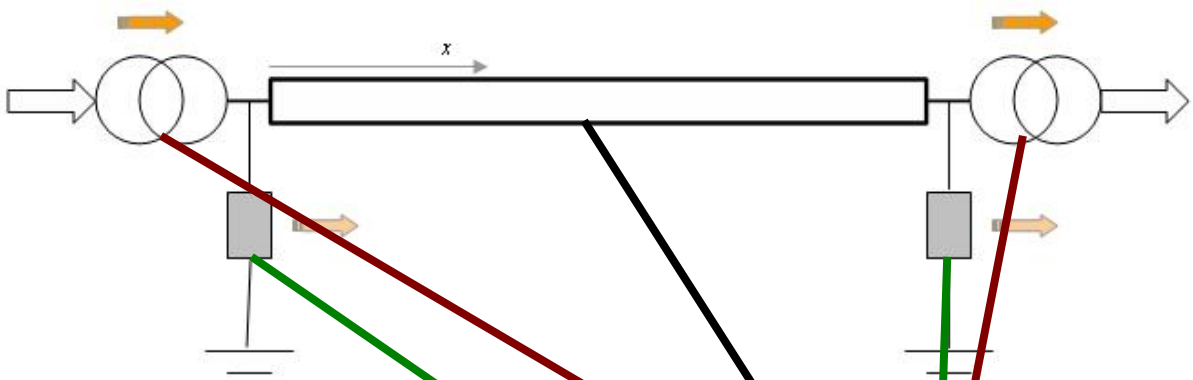

HVAC

- Transformer(s)
- Cable(s)
- Compensator unit

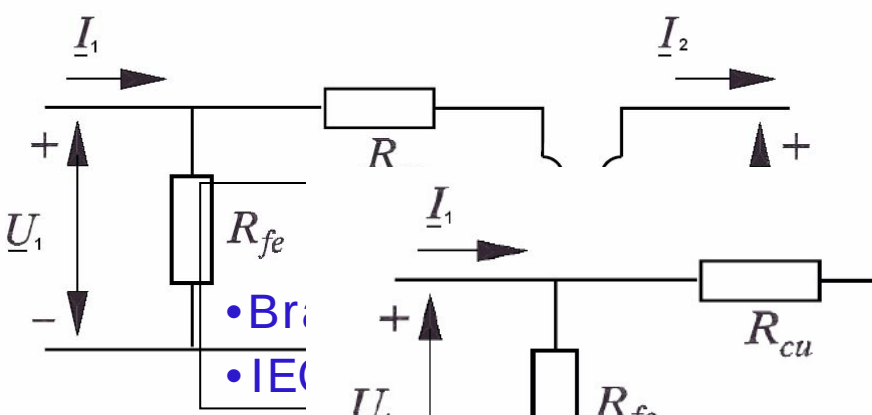

- Br
- IE

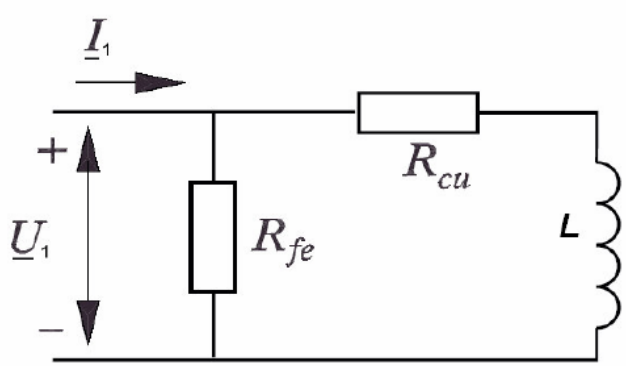

Loss Calculations – HVDC Systems

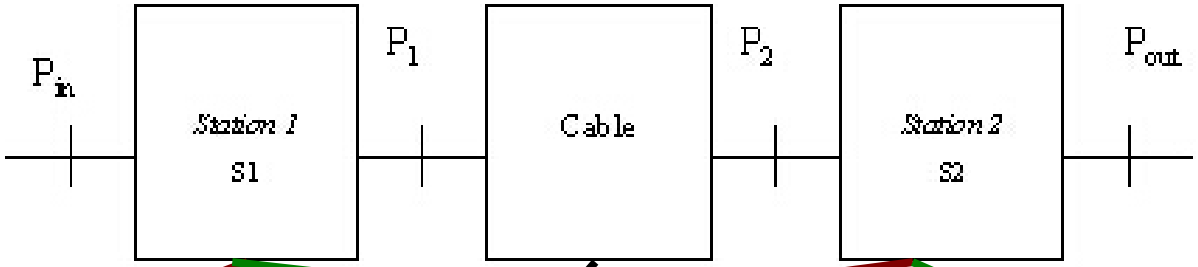

VSC

Total CS losses from installed projects (Cross Sound Cable and Murray Link Projects)

- Protection Devices
- Auxiliary power set

Cable

- Brakelmann's model
- IEC Standards

LCC

Total CS losses variable linearly from 0,11% (no load) to 0,7% (rated power) of the rated power of the CS (SIEMENS)

- Protection Devices
- Auxiliary power set

Loss Calculations – Data
500 MW + 1000 MW Wind Farm

	HVAC	HVDC VSC	HVDC LCC
Power Cable	Depending on WF size	220 MW, 350 MW, 500 MW	130 MW to 600 MW
Voltage Cable	132 kV, 220 kV, 400kV	± 150 kV	Up to 450 kV
Material Insulator	XLPE	PE	MI
Number Cable	Depending on WF size, up to 4	Multiple of 2 up to 6	1 up to 4
Converter Station	No	220 MW, 350 MW, 500 MW	130 MW to 600 MW
Compensator	Yes	No	No

Loss Calculations – HVAC Results (1)

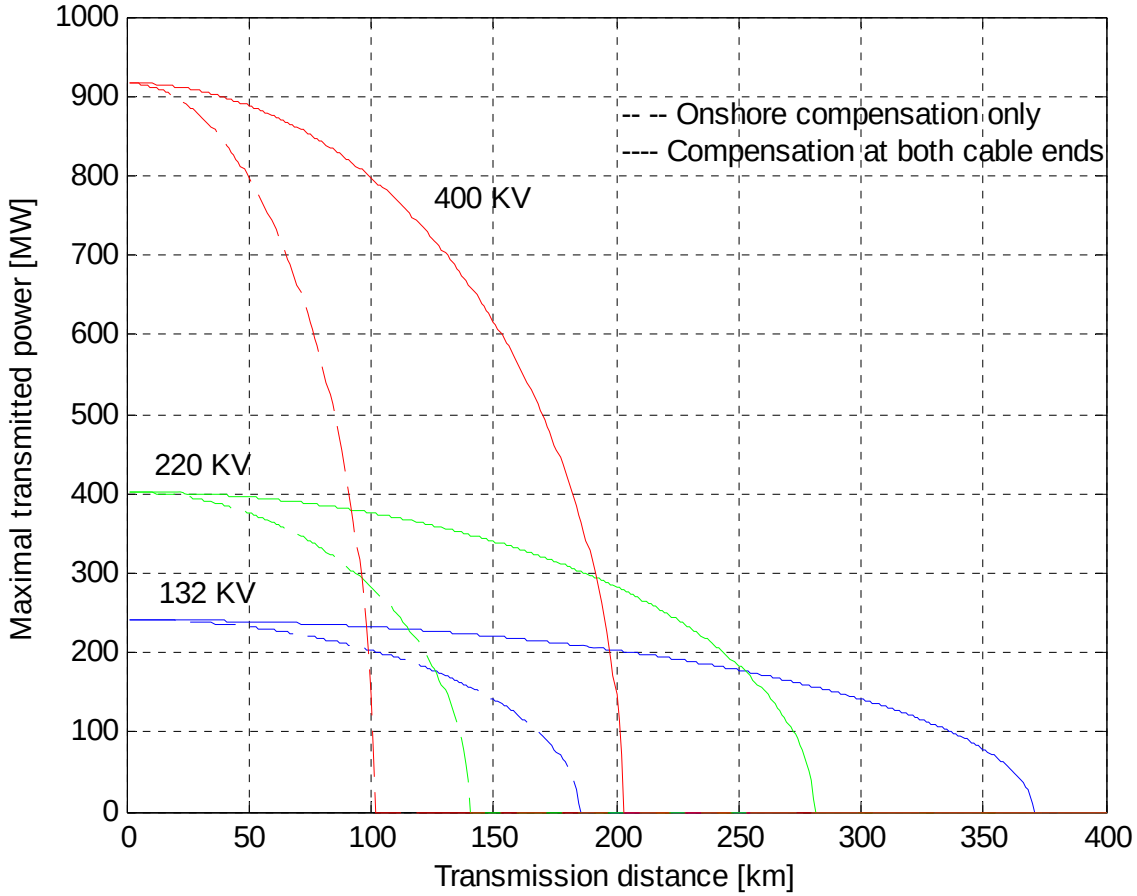

$L_{max,400\ KV} = 202\ km;\ L_{max,220\ KV} = 281\ km;\ L_{max,132\ km} = 370\ km$

Loss Calculations –Results

HVAC

%	500 MW WF, 9 m/s		
Length Cable	132 KV:3 cables	220 KV:2 cables	400 KV:1cable
50 km	2,78	1,63	1,14
100 km	4,77	3,07	2,54
150 km	7,53	5,05	4,98
200 km	11,09	7,76	17,59

HVDC LCC

%	500 MW WF, 9 m/s		
ngth Cable	500 CS	2 x 250 CS	600 CS
50 km	1,77	1,81	1,75
100 km	1,98	2,14	1,87
150 km	2,19	2,48	1,99
200 km	2,39	2,82	2,11

HVDC VSC

%	500 MW WF, 9 m/s		
Length Cable	350 + 220 CS	2 x 350 CS	500 CS
50 km	4,05	4,21	4,43
100 km	4,43	4,58	4,87
150 km	4,82	4,94	5,31
200 km	5,20	5,30	5,75

Loss Calculations - Participation

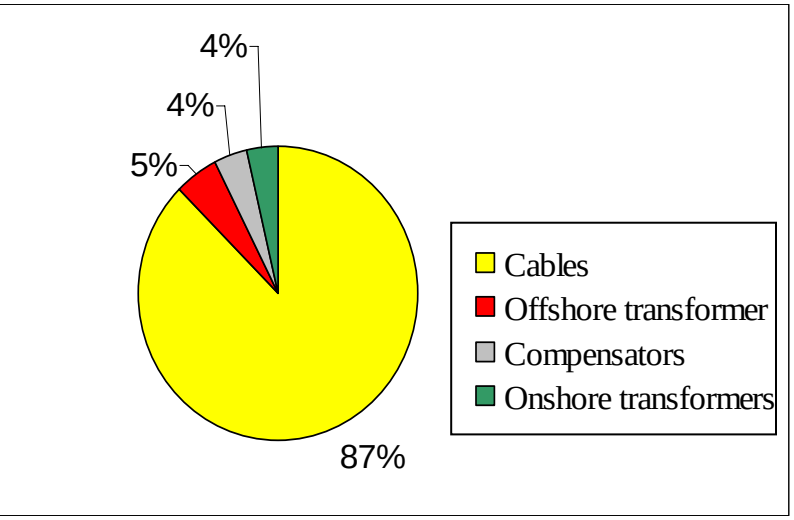

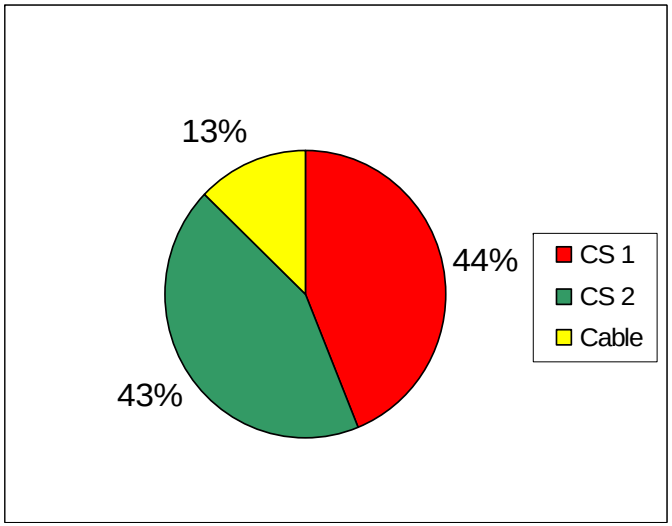

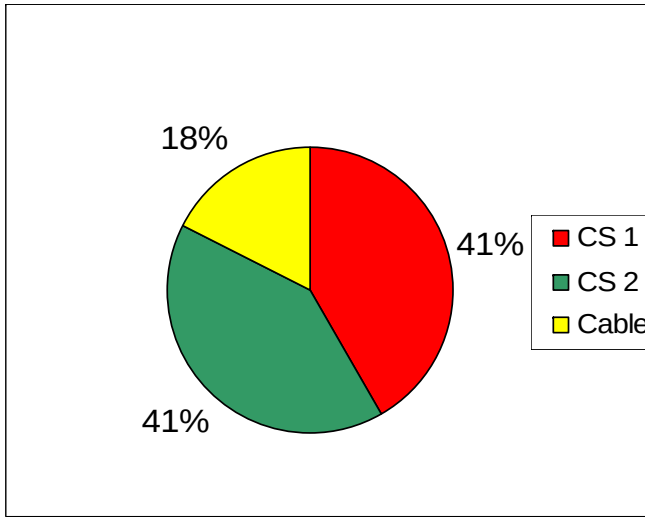

HVAC

$P_{TOT\%}$ = 4,77 %

HVDC LCC

$P_{TOT\%}$ = 1,87 %

HVDC VSC

$P_{TOT\%}$ = 4,43%

500 MW WF at 100 km to the shore - Avg wind speed 9 m/s

Comparison HVAC/HVDC

Combination of Technologies

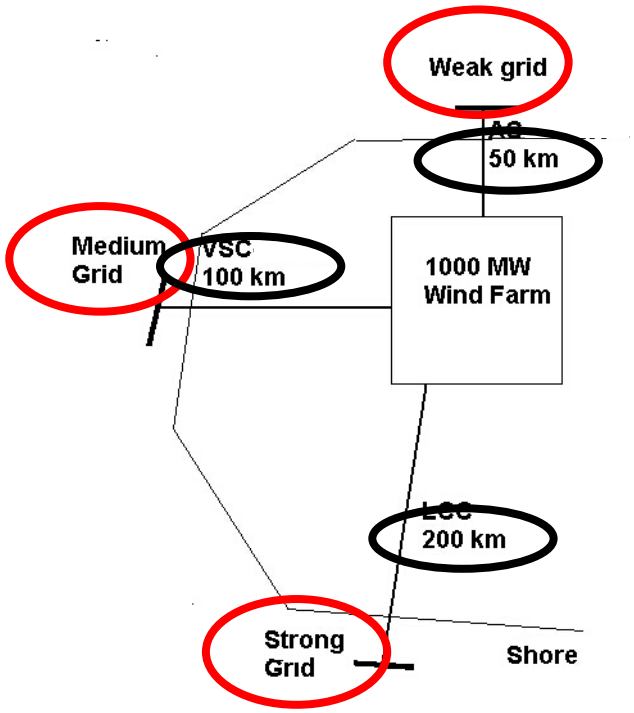

a) 80 MW AC + 220 MW VSC + 700 MW LCC
b) 50 MW AC + 350 MW VSC + 600 MW LCC
c) 180 MW AC + 220 MW VSC + 600 MW LCC

Results

Cases	Losses [%]	AC Participation [%]	LCC Participation [%]	VSC Participatio [%]
a	2,60	5,27	72,26	22,47
b	2,71	4,58	56,8	39,19
c	2,31	11,62	63,71	25,37

(Avg wind speed 9 m/s)

Reliability Analysis

Two parallel Transmission systems-P (MW) Windfarm as input

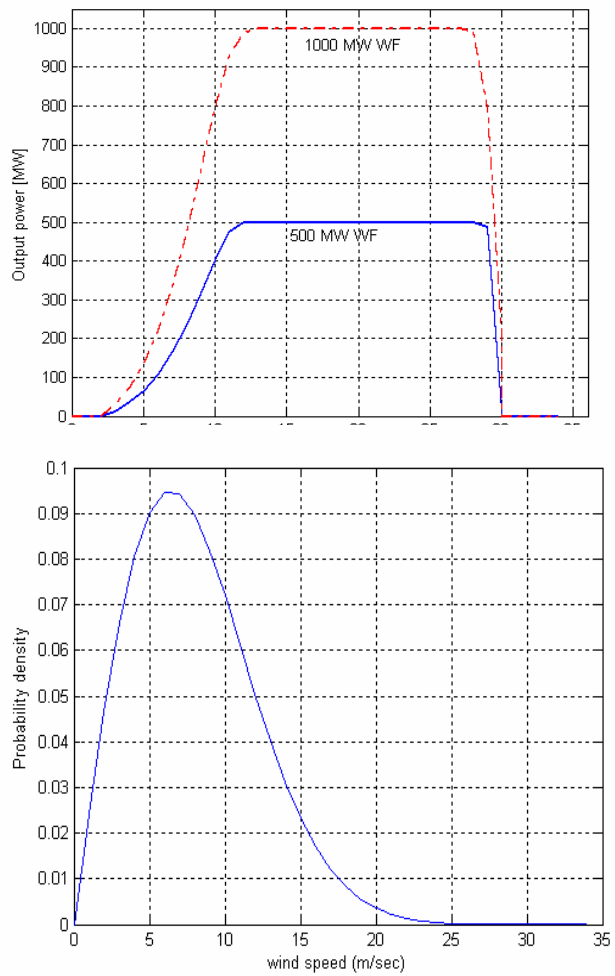

- Average windfarm power production:

$$P_{avg} = \int_{w_{cin}}^{w_{cout}} P(w) \cdot R(w) dw$$

w_{cin} and w_{cout} : the cut in and cut out speed of the wind farm respectively

$P(w)$: the power produced by the wind farm for wind speed w

$R(w)$: the probability of a wind speed w occurring, according to the Rayleigh distribution

Reliability Analysis

		Pole 1	Pole 2	Total
Mode 1	State	ON	ON	
	Transmission capability	P1 (MW)	P2 (MW)	(P1+P2) (MW)
	Probability	$1-F(O_{P1})$	$1-F(O_{P2})$	$[1-F(O_{P1})]*[1-F(O_{P2})]$
Mode 2	State	ON	OFF	
	Transmission capability	P1 (MW)	0 (MW)	P1 (MW)
	Probability	$1-F(O_{P1})$	$F(O_{P2})$	$[1-F(O_{P1})]*F(O_{P2})$
Mode 3	State	OFF	ON	
	Transmission capability	0 (MW)	P2 (MW)	P2 (MW)
	Probability	$F(O_{P1})$	$1-F(O_{P2})$	$F(O_{P1})*[1-F(O_{P2})]$
Mode 4	State	OFF	OFF	
	Transmission capability	0 (MW)	0 (MW)	0 (MW)
	Probability	$F(O_{P1})$	$F(O_{P2})$	$F(O_{P1})*F(O_{P2})$

- **During mode 1**: All produced power is being transmitted.
- **During mode 4**: Non of the produced power is being transmitted.
- **During mode 2**: Up to P1 MW production, all produced power is transmitted. For production y>P1 MW, (y-P1)MW not transmitted. The average non transmitted power during this mode is:

$$P_{non_tr_mode2} = \int_{P1}^{P} (y-P1)F(y)dy, \qquad F(y): \text{Probability of producing y MW}$$

- **During mode 3**: Similarly to mode 2

$$P_{non_tr_mode3} = \int_{P2}^{P} (y-P2)F(y)dy$$

Data Availability

- HVAC - not very good
- HVDC - LCC: Excellent
- HVDC - VSC: Very poor

Some Results ... with partly poor data

- Application of the algorithm indicated much higher energy unavailability of HVDC VSC compared to HVDC LCC configuration.

Energy Unavailability (%)	HVDC LCC : 2x500 MW converter station HVDC VSC: 2x500 MW converter station, 2x500 MW cable pair							
Transmission Distance	8 m/s		9 m/s		10 m/s		11 m/s	
	LCC	VSC	LCC	VSC	LCC	VSC	LCC	VSC
50 km	1.0656	5.7191	1.1555	6.2174	1.2215	6.5830	1.2700	6.8522
100 km	1.2147	6.0388	1.3187	6.5612	1.3950	6.9445	1.4512	7.2267
150 km	1.3641	6.3598	1.4822	6.9061	1.5688	7.3069	1.6326	7.6020
200 km	1.5139	6.6822	1.6459	7.2521	1.7428	7.6702	1.8141	7.9781
250 km	1.6640	7.0060	1.8099	7.5992	1.9170	8.0345	1.9959	8.3550
300 km	1.8144	7.3311	1.9742	7.9474	2.0915	8.3996	2.1778	8.7326

Two reasons contribute to these results:

- Much higher unavailability of VSCs compared to LCCs
- The intrerconnecting cable pair for VSC systems has twice as much unavailability value compared to the cable for LCC systems.

Investment Cost

- Costs for each component of each transmission system was determined

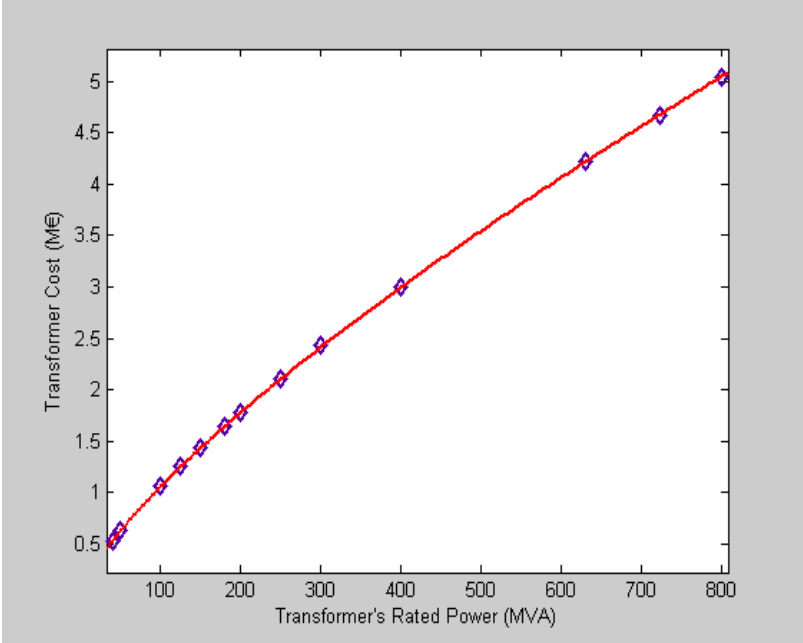

$$Cost_{trans} = 0.03327 \cdot P^{0.7513}$$

P :The rated power of the transformer in MVA

- The costs of the several components were added to provide the total investment cost for each and every configuration

Economic Evaluation ... with Partly Poor Data Quality

- 500 MW windfarm - 9 m/s wind average speed, interest rate *r* = 3%

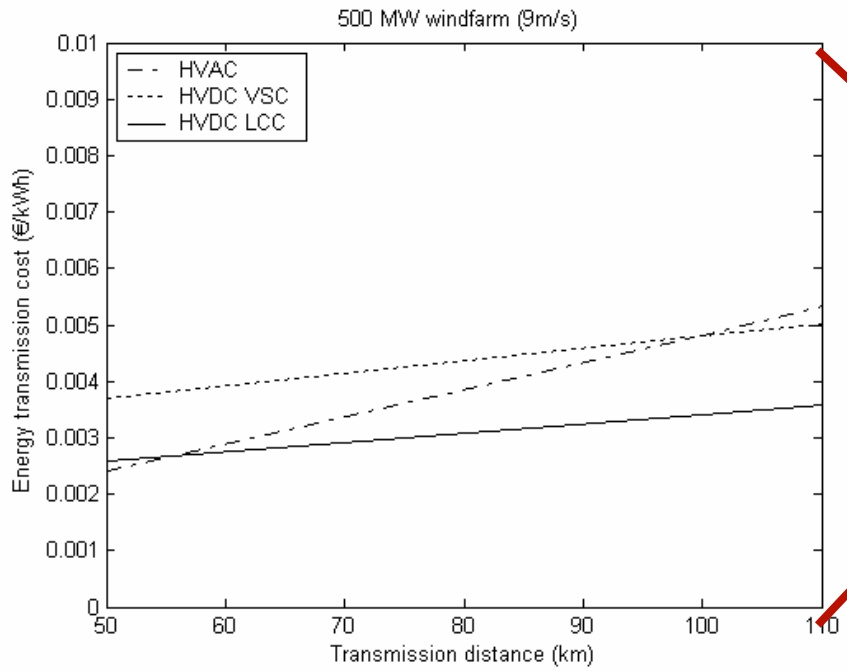

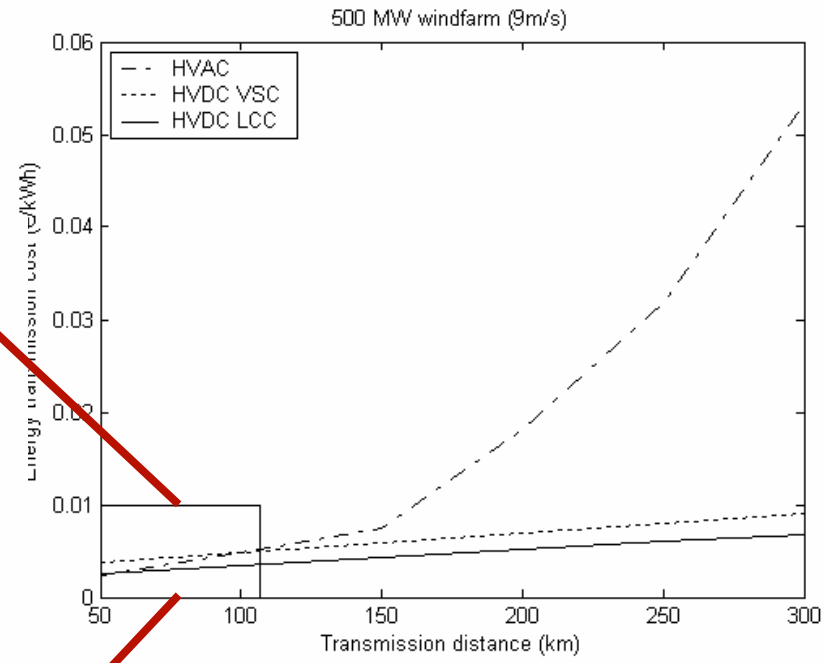

Not Considered

- **Cost of possible grid upgrad**
- **Cost of offshore platforms**

Conclusions

- Large wind farms might need different transmission technology (HVDC)
- Up to 60-70 km HVAC is the most economic transmission solution (independent of size)
- For longer distances HVDC technology becomes interesting, however, evaluation very difficult due to limited data
- For better evaluation we need data from the Industry.

Thank You