Evaluation of Electrical Transmission Concepts for Large Offshore Wind Farms

T. Ackermann[1], N. Barberis Negra[2], J. Todorovic[3], L. Lazaridis[4]

Abstract: This paper presents a comparison of the following transmission technologies: HVAC, HVDC Line Commutated Converter (LCC) and HVDC Voltage Source Converter (VSC). The comparison mainly considers system losses and reliability.

Index terms – HVAC, HVDC, LCC, Losses, Reliability.

I. Introduction

Today's installed offshore wind farms have a relative small rated capacity and are placed at shorter distances from shore than future planned projects [1]. Furthermore, all existing offshore wind farms (as of August 2005) are connected to shore by HVAC cables and only two of them have offshore substations [1]. For large wind farms, with hundreds of MW capacity, and may be a long distances to shore, offshore substations would be necessary for stepping up the voltage level (HVAC) and may be for converting the power to HVDC [2]. Due to the significant cost of the transmission system, the choice of the appropriate design and technology for the transmission system can be a decisive part of the overall project feasibility.

In this paper, the different technical solutions are compared for a 500 MW and a 1000 MW wind farm with different distance to shore (up to 200 km). In the first part, transmission losses are investigate, in the second part reliability issues.

Part 1: System Losses

II. HVAC Transmission

The production of large amounts of reactive power can be considered the main limiting factor of HVAC cable utilization in transmission systems for long distances.

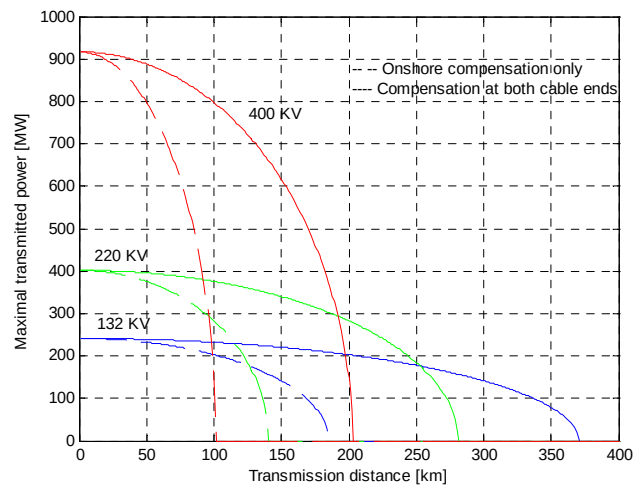

Figure 1. Limits of cables transmission capacity for three voltage levels, 132 KV, 220 KV and 400 KV

A comparison of the transmission capacity of cables with different voltage levels (132 kV, 220 kV and 400 kV) and different compensation solutions (only onshore or at both ends) is presented in *Figure 1*.

Cable limits, as maximal permissible current, voltage swing of receiving end between no-load and full load (< 10%) and phase variation (< 30°) should not be exceeded, according to Brakelmann [5]. The critical distance is achieved when half of the reactive current produced by the cable reaches nominal current at the end of one cable. In that case, in simple terms, there is no transmission capacity left for active power transmission. For the here considered cables, the critical distances are [3]:

- $L_{max,132KV} = 370$ km
- $L_{max,220KV} = 281$ km
- $L_{max,400KV} = 202$ km

A. Loss calculations

2.1.1) Models and assumptions

Due to space limitations, we would like to refer to [3, 4] for details regarding the method and model used for the loss calculations.

2.1.2) Results

Transmission system losses for average wind speed of 9 m/s, for three transmission voltage levels (132 KV, 220 KV

[1] T. Ackermann is with the Royal Institute of Technology, School of Electrical Engineering, Teknikringen 33, 10044 Stockholm, Sweden (E-mail: Thomas.Ackermann@ieee.org). He is the editor of the Book "Wind Power in Power Systems, published by Wiley & Sons, see also http://www.windpowerinpowersystems.info. He is also CEO of Energynautics, a consulting company.

[2] N. Barberis Negra has recently received his Master degree from the Politecnico of Turin, Italy and is an Industrial PhD student at Elsam, Denmark. (E-mail: Nicola.barberis@libero.it)

[3] J. Todorovic is with the Transmission Company Elektroprenos, Banja Luka, Bosnia Herzegovina (E-mail: todorovicjovan@hotmail.com)

[4] L. Lazaridis has recently received his M. Sc. from the Royal Institute of Technology, Department of Electrical Engineering. (E-mail: llazaridis@yahoo.com)

and 400 KV) and for two wind farm configurations of 500 MW and 1000 MW are presented in *Table I* and *Table II*, respectively.

Transmission system losses $l_{\%}$ have been calculated as

$$l_{\%} = \frac{\left(\sum_{i}^{N} P_{lost,i} \cdot p_i\right) \cdot h \cdot a}{\left(\sum_{i}^{N} P_{gen,i} \cdot p_i\right) \cdot h \cdot a} \quad (1)$$

where $P_{lost,i}$ is the power lost by the transmission system at wind speed i, $P_{gen,i}$ is the power generated by the wind farm at wind speed I, N is the number of wind speed class considered for the model, p_i is the probability to have a certain wind speed i and it is obtained by the Rayleigh distribution, h is the number of hours in a year, a is the availability of the wind park.

TABLE I
TRANSMISSION LOSSES OF A 500 MW WIND FARM, WITH 9 M/S OF AVERAGE WIND SPEED IN THE AREA IN % OF ANNUAL WIND FARM PRODUCTION.

%	500 MW		
Cable length	132 KV:3 cables	220 KV:2 cables	400 KV:1 cable
50 km	2,78	1,63	1,14
100 km	4,77	3,07	2,54
150 km	7,53	5,05	4,98
200 km	11,09	7,76	17,59

Shaded cells in *Table I/II* represent the transmission solutions with the lowest losses, while the number of cables indicate the number of cables required. In the 132 KV column, number of cables presents the number of cables required for a distance of 200 km.

TABLE II
TRANSMISSION LOSSES OF A 1000 MW WIND FARM, WITH 9 M/S OF AVERAGE WIND SPEED IN THE AREA IN % OF ANNUAL WIND FARM PRODUCTION.

%	1000 MW		
Cable length	132 KV:5 cables	220 KV:4 cables	400 KV:2 cables
50 km	3,15	1,96	1,14
100 km	5,7	3,67	2,32
150 km	8,75	5,85	4,3
200 km	12,36	7,58	15,14

Figure 2 shows the loss participation of each transmission component for a 500 MW wind farm at 100 km from the shore using a 132 kV cable. It can be seen that cable losses represents by far the largest share of the total transmission losses. Thus, in order to decrease the total transmission losses, the transmission designers should pay special attention on cable selection.

From *Table I* and *Table II*, it can be seen that 220 KV and 400 KV solutions lead to the lowest loses. However, these two submarine XLPE cable designs are still under development [7]. Today, the 400 KV XLPE submarine cable is only tested for short lengths without appropriate joint and splices for longer lengths. Hence, for currently only 132 KV solutions can be considered realistic [5].

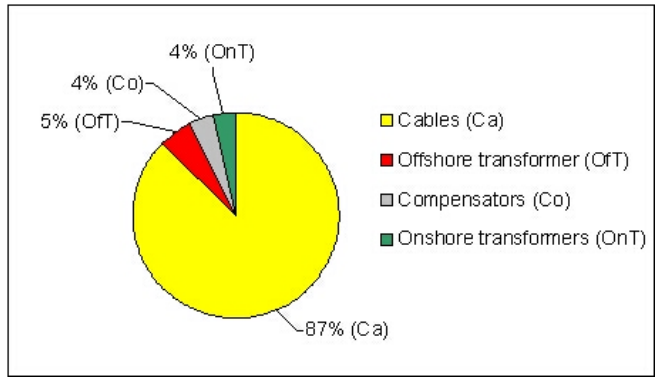

Fig.2. Participation of each transmission component in total transmission losses for 500 MW wind farm, 9 m/s of average wind speed, at 100 km transmission distance, 3 three–core 132 KV submarine cables [6].

III. HVDC SYSTEM WITH LINE COMMUTATED CONVERTER

Line Commutated Converter (LCC) devices have been installed in many bulk power transmission systems over long distances both on land and submarine all around the world, see [8] and [9]. A draw back of this transmission solution is the required reactive power to the thyristor valves in the converter and may be the generation of harmonics in the circuit [8]. Figure 3 shows a typical layout of a HVDC LCC system.

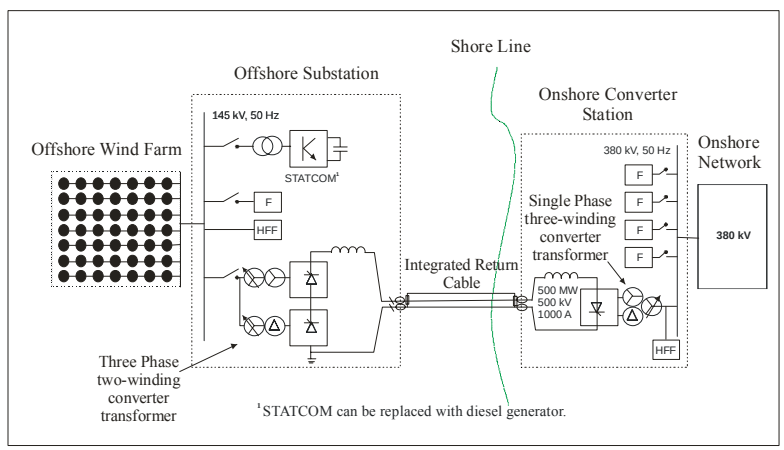

Figure 3: Basic configuration of a 500 MW wind farm using a Line Commutated Converter HVDC system with a Statcom.

A. Loss calculations

3.1.1) Models and assumptions

Due to space limitations, we would like to refer to [3, 6] for details regarding the method and model used for the loss calculations.

3.1.2) Results

Three different layouts are considered for 500 MW wind farm and four for 1000 MW wind farm: these configurations are shown in *Table III* with the system losses of each system.

Transmission system losses $l_{\%}$ have been calculated with equation (1).

TABLE III
TRANSMISSION LOSSES FOR DIFFERENT CONVERTER STATION LAYOUTS WITH 9 M/S OF AVERGAE WIND SPEED IN THE AREA IN % OF ANNUAL WIND FARM PRODUCTION

	500 MW, 9 m/s			1000 MW, 9 m/s			
Length Cable	500 CS	2 x 250 CS	600 CS	2 x 500 CS	600 CS + 440 CS	500 CS + 600 CS	2 x 600 CS
50 km	1,77	1,81	1,75	1,69	1,60	1,66	1,6547
100 km	1,98	2,14	1,87	1,92	1,77	1,84	1,7819
150 km	2,19	2,48	1,99	2,14	1,95	2,01	1,909
200 km	2,39	2,82	2,11	2,37	2,13	2,19	2,0362

The grey marked cells in *Table III,* represent the configuration with the lowest losses. For some configurations, loss participation of each component is shown in *Figure 4*.

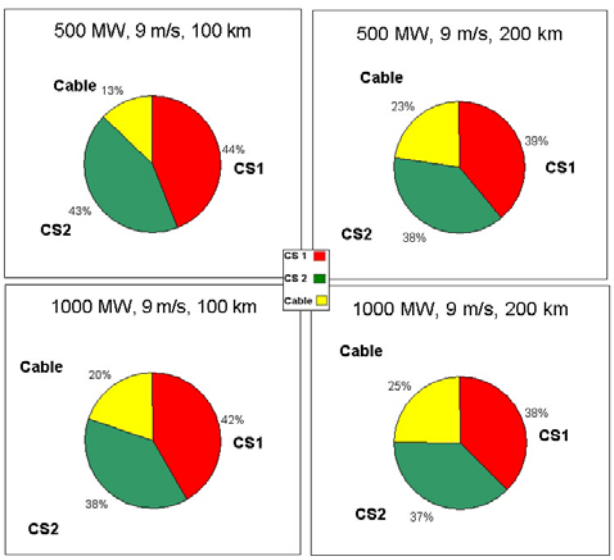

Figure 4: Loss Participation to the overall system losses from data in Table III. (CS =Converter Station).

Converter stations are responsible for the highest share of the overall system losses; participation of the cable increases with lengths.

IV. HVDC SYSTEM WITH VOLTAGE SOURCE CONVERTER

Voltage Source Converter (VSC) devices have been installed in some bulk power transmission systems over long distances both on land and submarine all around the world. However, the VSC solution is comparatively new compared to the LCC solution, and relevant projects have been installed only from 1997 [9]. On the one hand, the VSC solutions is able to supply and absorb reactive power to the system and may help to support power system stability; on the other hand losses are higher and line to ground faults can be problematic. Figure 5 shows a typical layout of a HVDC VSC system.

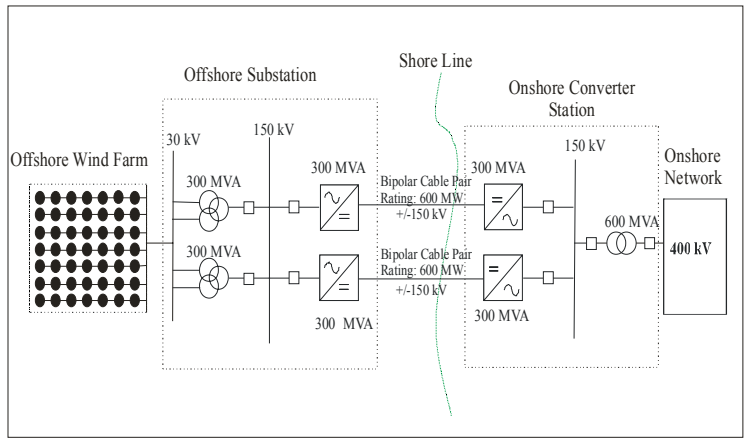

Figure 5: Single-line diagram for a 600 MW wind farm using two Voltage Source Converter HVDC system, each converter station with a 300 MW rating.

A. Loss calculations

4.1.1) Models and assumptions

Due to space limitations, we would like to refer to [3, 6] for details regarding the method and model used for the loss calculations.

4.1.2) Results

Three different layouts are considered for a 500 MW wind farm and two for a 1000 MW wind farm: these configurations are shown in *Table IV* with the percent losses of each system.

TABLE IV
TRANSMISSION LOSSES FOR DIFFERENT CONVERTER STATION LAYOUTS WITH 9 M/S OF AVERGAE WIND SPEED IN THE AREA IN % OF ANNUAL WIND FARM PRODUCTION

	500 MW, 9 m/s			1000 MW, 9 m/s	
Length Cable	350 + 220 CS	2 x 350 CS	500 CS	3 x 350 CS	2 x 500 CS
50 km	4,05	4,21	4,43	4,02	4,0893
100 km	4,43	4,58	4,87	4,52	4,5597
150 km	4,82	4,94	5,31	5,02	5,0317
200 km	5,20	5,30	5,75	5,52	5,505

Transmission system losses $l_{\%}$ have been calculated with (1). The grey cells in *Table IV,* represent the configuration with the lowest losses.. For some configurations, participation of each component in the system losses of the system is shown in *Figure 6*. It can be seen that converter stations contribute most to the overall system losses; participation of the cable increases with lengths.

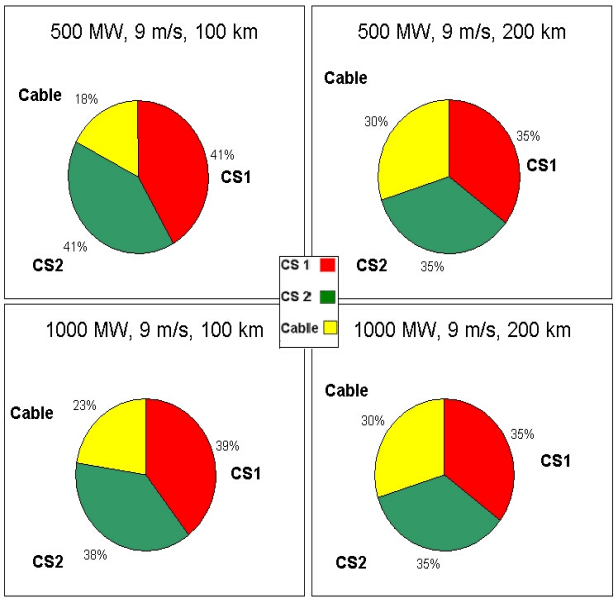

Figure 6. Loss Participation to the overall system from data in Table IV, VSC system. (CS = Converter Station).

V. Comparison of Different Solutions

From results in sections II, III and IV, the AC solution provides the lowest losses for a distance of 50 km from shore, while for 100, 150 and 200 km from the shore the HVDC LCC solution has lowest transmission losses, see also *Table V* and *Table VI*. In the tables, 'Config' stands for the rated power and the voltage level (between breakers) for the HVAC system and the rated power of the converter station for the two HVDC solutions and 'Nr Cables' the number of cable requires for the transmission.

Table V
Loss comparison for 500 MW wind farm at 9 m/s average wind speed in the area (CS = Converter Station).

500 MW			
	HVAC	HVDC LCC	HVDC VSC
Config	500 MW (400 kV)	600 MW CS	(350 + 220) MW CS
Nr Cables	1	1	4
at 50 km	1,13	1,75	4,05
at 100 km	2,54	1,87	4,43
Config	500 MW (400 kV)	600 MW CS	(350 + 220) MW CS
Nr Cables	1	1	4
at 150 km	4,98	1,99	4,82
Config	500 MW (220 kV)	600 MW CS	(350 + 220) MW CS
Nr Cables	2	1	4
at 200 km	7,76	2,11	5,20

Table VI
Loss comparison for 1000 MW wind farm at 9 m/s average wind speed in the area (CS = Converter Station).

1000 MW			
	HVAC	HVDC LCC	HVDC VSC
Config.	1000 MW (400 kV)	440 + 600 MW CS	3 x 350 MW CS
Nr Cables	2	2	6
at 50 km	1,14	1,60	4,02
at 100 km	2,32	1,77	4,52
Config.	1000 MW (400 kV)	2 x 600 MW CS	3 x 350 MW CS
Nr Cables	2	2	6
at 150 km	4,30	1,91	5,02
Config.	1000 MW (220 kV)	2 x 600 MW CS	2 x 500 MW CS
Nr Cables	4	2	4
at 200 km	7,58	2,04	5,51

In some cases it might be beneficial to combine different transmission solutions in order to obtain a wider overview of possible solution and to improve some features of the system (reliability, stability, etc.). For example, a HVDC VSC transmission system, might be useful to improve the stability of the system as it can control the generation and absorption of reactive power in the system.

The losses for different combinations are presented in *Table VII* and *Table VIII*: in row 'Config' the rated power of the relative transmission system is given (in brackets: the voltage level of the HVAC system), in 'Nr Cables' the number of cables necessary for each transmission system and 'at x km' system losses are shown. In the tables, symbol '+' divides the kind of system used for the transmission.

Table VII
Comparison of combined transmission solutions losses for a 500 MW wind farm at 9 m/s average wind speed

500 MW						
	AC + VSC		AC+ LCC		LCC + VSC	
Config.	280 MW (400 kV) + 220 MW	150 MW (220 kV) + 350 MW	200 MW (220 kV) + 300 MW	60 MW (220 kV) + 440 MW	300 MW + 220 MW	250 MW + 350 MW
Nr Cables	1 + 2	1 + 2	1 + 1	1 + 1	1+ 2	1 + 2
at 50 km	2,02	3,11	1,54	1,70	2,61	2,86
Config.	280 MW (400 kV) + 220 MW	150 MW (220 kV) + 350 MW	370 MW (400 kV) + 130 MW	250 MW (400 kV) + 250 MW	300 MW + 220 MW	250 MW + 350 MW
Nr Cables	1 + 2	1 + 2	1 + 1	1 + 1	1+ 2	1 + 2
at 100 km	3,21	3,94	2,57	2,55	2,89	3,22
Config.	280 MW (220 kV) + 220 MW	150 MW (132 kV) + 350 MW	370 MW (220 kV) + 130 MW	250 MW (132 kV) + 250 MW	300 MW + 220 MW	250 MW + 350 MW
Nr Cables	1 + 2	1 + 2	2 + 1	2 + 1	1+ 2	1 + 2
at 200 km	6,88	6,98	6,89	6,55	3,46	3,93

It can be seen that the combination of two different transmission systems never improves the system losses compared to configurations with a single transmission system. However, system losses of the system with highest losses decrease with the combination with another system.

TABLE VIII
COMPARISON OF COMBINED TRANSMISSION SOLUTIONS LOSSES FOR A 1000 MW WIND FARM AT 9 M/S AVERAGE WIND SPEED

1000 MW					
	AC + VSC	AC+ LCC		LCC + VSC	
Config.	200 MW (220 kV) + 800 MW	200 MW (400 kV) + 800 MW	300 MW (400 kV) + 700 MW	500 MW + 500 MW	250 MW + 800 MW
Nr Cables	1 + 4	1 + 2	1 + 2	1 + 4	1 + 6
at 50 km	3,20	1,44	1,31	2,46	3,18
Config.	500 MW (400 kV) + 500 MW	800 MW (400 kV) + 250 MW	900 MW (400 kV) + 130 MW	500 MW + 500 MW	250 MW + 800 MW
Nr Cables	2 + 4	1 + 1	2 + 1	1 + 4	1 + 6
at 100 km	3,02	2,56	2,32	2,70	3,58
Config.	500 MW (220 kV) + 500 MW	800 MW (220 kV) + 250 MW	900 MW (220 kV) + 130 MW	500 MW + 500 MW	250 MW + 800 MW
Nr Cables	2 + 4	3 + 1	4 + 1	1 + 4	1 + 6
at 200 km	6,66	6,68	7,18	3,16	3,93

Part 2: Reliability

VI. ENERGY UNAVAILABILITY OF TRANSMISSION SYSTEMS

Failures are common phenomena in electric power systems. In order to investigate the contribution of failures on the economic performance of the transmission systems the term energy unavailability is introduced. The energy unavailability is defined as the percentage of energy produced by the wind farm that cannot be transmitted as a result of failures (forced outages) in the transmission system. Maintenance (scheduled outages) is another factor that contributed to the energy unavailability. It is assumed though that maintenance takes place during periods with low wind speeds and thus its contribution to the unavailability of the system is minimal.

In the following the general method for the calculation of unavailability is briefly explained, using an HVDC LCC transmission system.

A. HVDC LCC transmission systems unavailability

In order to calculate the energy availability failures, data concerning the components of HVDC LCC systems had to be collected and analyzed. The major source for these data was the CIGRE reliability reports [10, 11, 12, 13]. In these reports the data on forced outages are classified into six major categories:

- AC and auxiliary equipment (AC-E);
- Valves (V);
- Control and protection (C&P);
- DC equipment (DC-E);
- Other (O);
- Transmission line or cable (TLC);

Only data from systems that had technological similarities to the ones used in this study were included in the analysis. The extracted probabilities that the above mentioned components will not be operating in a given period of time are presented in *Table IX*.

TABLE IX
PROBABILITIES OF NOT OPERATING FOR COMPONENTS OF HVDC LCC TRANSMISSION SYSTEMS

Component	Probability of not operating
Converter Transformers	0.009251
AC auxiliary equipment	0.001397
Thyristor Valves (converter)	0.001175
DC equipment	0.000647
Protection and control	0.000545
Other	0.000124
Submarine cable	0.004462(1)

(1) Per 100km

The data presented in *Table IX* refer to both transmitting and receiving substations.

6.1.1) Method for calculating the energy unavailability

In *Figure 7* the basic configuration of a HVDC LCC transmission system connected to a wind farm is presented.

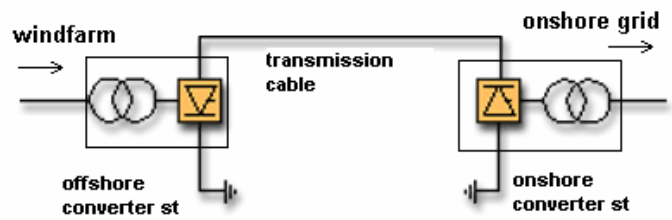

Figure 7: Basic configuration of a HVDC LCC transmission line from an offshore wind farm.

Based on the component categories given in *Table IX,* an example of the calculation of the energy availability of a HVDC LCC system that consists of two parallel poles will be given. The schematic representation of such a system for the use of the energy unavailability study is shown in *Figure 8*. The two parallel poles use common AC filters.

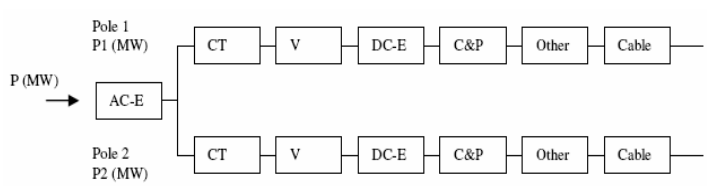

Figure 8: Schematic representation of a bipole HVDC LCC system for availability study. (AC-E: AC auxiliary equipment, CT: Converter transformer, V: Valves, DC-E: DC equipment, C&P: Control and Protection, O: Other, Cable: Submarine cable)

In the system described in *Figure 8*, the wind farm has a total rated power of P (MW) and an average output power of P_{AVG} (MW). Pole 1 is rated at P_1 (MW) and pole to at P_2 (MW). It can be assumed that:

$$P_1 + P_2 \geq P \quad (2)$$

If the state in which the converter transformer (CT) is not operating is named O_{CT}, then the probability of this state, according to Table III is:

$$F(O_{CT})=0.009251 \quad (3)$$

In the same way, states $O_{AC\text{-}E}$, O_V, $O_{DC\text{-}E}$, $O_{C\&P}$, O_{Cable}, O_o, are introduced for the AC auxiliary equipment, valves, DC equipment, protection and control, cable and other respectively. In order to calculate the energy unavailability two major assumptions are made:

- States in which failures occur in serial connected components are disjoint, meaning that if one fault occurs in one component, none of the others are operating thus no fault can occur to them;
- States in which failures occur to parallel lines are independent of each other;

The probability that the first pole will not be operating due to a fault on its components (common AC-E not included) is given by:

$$F(O_{P1}) = F(O_{Trans} \cup O_{Valves} \cup O_{DC-E} \cup O_{C\&P} \cup O_O \cup O_{Cable}) \quad (4)$$

According to the first assumption, equation (4) can be rewritten as:

$$F(O_{P1})=F(O_{Trans})+F(O_{Valves})+F(O_{DC-E})+F(O_{C\&P})+F(O_O)+F(O_{Cable}) \quad (5)$$

Equation (5) can describe also the probability of failure in the second parallel pole. Since it is assumed that states in the parallel poles are independent, the probability of having a fault in both parallel poles is given by:

$$F(O_{P1\&P2})=F(O_{P1} \cap O_{P2}) \quad (6)$$

or

$$F(O_{P1\&P2})=F(O_{P1}) \cdot F(O_{P2}) \quad (7)$$

The two parallel poles can be found operating in four different modes:

- Pole 1 “ON”, Pole 2 “ON”
- Pole 1 “ON”, Pole 2 “OFF”
- Pole 1 “OFF”, Pole 2 “ON”
- Pole 1 “OFF”, Pole 2 “OFF”

Each mode has a specific probability of occurring and a different power transmission capability. *Table X* summarizes these operation modes, together with their probabilities of occurring and their total transmission capabilities:

TABLE X
OPERATION MODES AND THEIR PROBABILITIES OF THE PARALLEL HVDC LCC SYSTEM

		Pole 1	Pole 2	Total
Mode 1	State	ON	ON	
	Transmission capability	P1 (MW)	P2 (MW)	(P1+P2) (MW)
	Probability	$1\text{-}F(O_{P1})$	$1\text{-}F(O_{P2})$	$[1\text{-}F(O_{P1})]*[1\text{-}F(O_{P2})]$
Mode 2	State	ON	OFF	
	Transmission capability	P1 (MW)	0 (MW)	P1 (MW)
	Probability	$1\text{-}F(O_{P1})$	$F(O_{P2})$	$[1\text{-}F(O_{P1})]*F(O_{P2})$
Mode 3	State	OFF	ON	
	Transmission capability	0 (MW)	P2 (MW)	P2 (MW)
	Probability	$F(O_{P1})$	$1\text{-}F(O_{P2})$	$F(O_{P1})*[1\text{-}F(O_{P2})]$
Mode 4	State	OFF	OFF	
	Transmission capability	0 (MW)	0 (MW)	0 (MW)
	Probability	$F(O_{P1})$	$F(O_{P2})$	$F(O_{P1})*F(O_{P2})$

If the transmission system is operated for a period of time *T*, then according to *Table X* the system will be found operating in:

- mode 1 for time:

$$T_{mode1} = [1 - F(O_{P1})] \cdot [1 - F(O_{P2})] \cdot T \quad (8)$$

- mode 2 for time:

$$T_{mode2} = [1 - F(O_{P1})] \cdot F(O_{P2}) \cdot T \quad (9)$$

- mode 3 for time:

$$T_{mode3} = F(O_{P1}) \cdot [1 - F(O_{P2})] \cdot T \quad (10)$$

- mode 4 for time:

$$T_{mode4} = F(O_{P1}) \cdot F(O_{P2}) \cdot T \quad (11)$$

As mentioned before the energy unavailability is defined as the percentage of energy produced by the windfarm that cannot be transmitted due to forced outages. The next equation describes this definition mathematically for the case of the two parallel poles without the common AC filters:

$$Un_{pole1\&2} = \frac{Energy \quad not \quad transmitted}{Energy \quad that \quad could \quad have \quad been \quad transmitted} \cdot 100\% \quad (12)$$

In order for the non-transmitted energy to be calculated the four modes have to be studied separately:

- During mode 1: All of the produced power is being transmitted (according to *equation 2*). So:

$$P_{non_tr_mode1} = 0 \text{ MW} \quad (13)$$

- During mode 4: None of the P_{avg} MW produced by the wind farm are being transmitted. So:

$$P_{non_tr_mode4} = P_{avg} \text{ MW} \quad (14)$$

where P_{avg} is the average power produced by the wind farm.

- During mode 2: For power production up to P_1 MW all of the produced power is being transmitted. If it is assumed that the produced power is *y* MW, where *y* is greater than P_1, then the non-transmitted power will be $(y-P_1)$ MW. According to the Rayleigh distribution and the aggregated model of the wind farm (see figures 1 and 3), there is a very specific probability that *y* MW will be produced by the wind farm. This probability is named *F(y)*. So if the transmission system operated continuously in this mode, the average value of the non-transmitted power would be:

$$P_{non_tr_mode2} = \int_{P1}^{P} (y - P_1) F(y) dy \text{ MW} \quad (15)$$

where *P* is the maximum power that the wind farm can produce.

- During mode 3: Similarly to mode 2, the non-transmitted power is:

$$P_{non_tr_mode3} = \int_{P2}^{P} (y - P_2) F(y) dy \text{ MW} \quad (16)$$

Equation (12) can now be rewritten as:

$$Un_{pole1\&2} = \frac{1}{P_{AVG} \cdot T} (P_{non_tr_mode1} \cdot T_{mode1} + P_{non_tr_mode2} \cdot T_{mode2} + P_{non_tr_mode3} \cdot T_{mode3} + P_{non_tr_mode4} \cdot T_{mode4}) \cdot 100\% \quad (17)$$

All the inputs in equation (17) have been defined. In order to calculate the energy unavailability for the entire system the unavailability of the AC auxiliary equipment (AC-E) is added. For the common AC auxiliary equipment the unavailability is:

$$Un_{AC-E} = \frac{F(O_{Ac-E}) \cdot T \cdot P_{AVG}}{P_{AVG} \cdot T} \cdot 100\% = F(O_{Ac-E}) \cdot 100\% \quad (18)$$

For the entire system the energy unavailability is:

$$Un_{total} = Un_{pole1\&2} + Un_{AC-E} \quad (19)$$

6.1.2) HVDC LCC transmission systems energy unavailability results

The energy unavailability results for the HVDC LCC transmission systems described before are presented in *Table XI*. It has to be mentioned that for the calculation of the energy unavailability of the transmission systems the losses are not considered and the availability of the wind farm is assumed to be 100%.

TABLE XI
ENERGY UNAVAILABILITY AS A PERCENTAGE OF AVERAGE PRODUCED ENERGY FOR HVDC LCC TRANSMISSION SYSTEMS.

(%)	500 MW windfarm			1000 MW windfarm			
Transmis. Distance	500 CS	2x250 CS	600 CS	2x500 CS	600 CS+ 440 CS	500 CS+ 600 CS	2x600 CS
50 km	1.53	1.16	1.53	1.15	1.11	1.03	0.90
100 km	1.76	1.33	1.76	1.31	1.27	1.17	1.03
150 km	1.98	1.49	1.98	1.48	1.42	1.31	1.15
200 km	2.20	1.66	2.20	1.64	1.58	1.46	1.28
250 km	2.42	1.82	2.42	1.80	1.74	1.60	1.40
300 km	2.65	1.99	2.65	1.97	1.89	1.75	1.53

From the results shown in *Table XI* it can be seen that the energy availability is increased when the transmission system utilizes parallel poles. Increasing the rated power of the parallel poles improves even more the availability of the system.

B. HVDC VSC transmission systems unavailability

Unlike HVDC LCC systems, where statistical data concerning failures and reliability have been collected and analyzed for years, no similar data exists for the HVDC VSC technology. In order to evaluate the energy availability of HVDC VSC transmission systems many assumptions have to be made to be able to use already existing data, e.g. the HVDC VSC configuration is simplified (see Figure 8) for the evaluation.

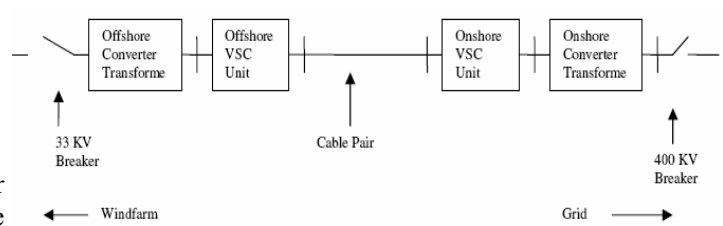

F

Figure 8: Basic configuration of a HVDC VSC transmission line from an offshore wind farm.

Than it is possible to use existing data from various sources, e.g. the "Canadian Electricity Association" report on forced outages performance of transmission equipment [14]. As for the VSC units, data for static compensators could be used in order to calculate the availability. STATCOMs provide the closest solution because of the technological similarities that they have with VSCs.

Another problem encountered is the lack of data concerning submarine DC cables with polymeric insulation that are used for HVDC VSC transmission systems. For this reason the unavailability of submarine DC cables with mass impregnated insulation, similar to HVDC LCC systems, could be used.

6.2.1) HVAC energy unavailability: results

Even so we have calculated the energy unavailability results for the HVDC VSC transmission systems using the above described simplifications, we do not like to present the results in this paper because we cannot give very good indications about the quality of the results at this stage. Interested parties are welcome to get in contact with us to discuss the approach and the results in more detail.

C. HVAC transmission systems unavailability

For the energy unavailability study of HVAC transmission systems the general model of *Figure 9* is used.

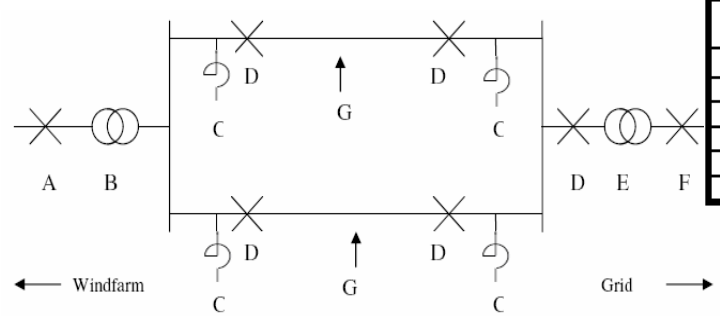

Fig. 9. Simplified model used for the evaluation of HVAC transmission systems energy availability. A: circuit breaker (33 kV), B: offshore transformer (33kV/transmission voltage), C: Shunt reactor, D: circuit breaker (transmission voltage), E: Onshore transformer (transmission voltage /400kV), F: circuit breaker (400kV), G: three core XLPE cable (transmission voltage).

In case the transmission voltage is 400 kV the onshore transformer is not required. The data concerning the availability of HVAC transmission systems were derived from [14] with the exception of XLPE cables. Since no data were available on availability of submarine XLPE cables, the value used in the case of HVDC LCC cables is used once again, for all HVAC voltage levels. *Table XII* summarizes the probabilities that the individual components of an HVAC will not operate in a given time period.

6.3.1) HVDC LCC transmission systems energy unavailability results

Following the same method as in HVDC systems, the energy unavailability for the proposed HVAC systems is derived. The energy unavailability results are presented in *Table XIII.* Unlike HVDC systems where the energy unavailability kept increasing with distance, in some cases of HVAC systems the unavailability decreases during the transition to a longer transmission distance. This can explained by the fact that the number of cables in the HVAC solutions varies with distance.

TABLE XII
PROBABILITIES OF NOT OPERATING FOR COMPONENTS OF HVAC TRANSMISSION SYSTEMS

Probability of not operating		Transformers	Breakers	Shunt Reactors	Cables(1)
Voltage level (kV)	33	-	0.004608	-	-
	132	0.003571	0.001811	0.000701	0.004462
	220	0.002460	0.001892	0.000701	0.004462
	400	0.003045	0.001426	0.000701	0.004462

(1) Per 100km

TABLE XIII
ENERGY UNAVAILABILITY AS A PERCENTAGE OF PRODUCED ENERGY FOR HVAC TRANSMISSION SYSTEMS.

(%)	500 MW windfarm			1000 MW windfarm		
Transmis distance	132 kV	220 kV	400 kV	132 kV	220 kV	400 kV
50 km	1.58	1.53	1.55	1.07	1.18	0.72
100 km	1.56	1.64	1.77	1.15	1.34	0.84
150 km	1.69	1.84	2.00	1.36	1.63	1.20
200 km	1.93	2.21	1.28	1.73	1.39	1.24
250 km	2.37	2.17	-	1.58	1.32	-
300 km	2.13	-	-	1.12	-	-

VII. INVESTMENT COST

The final parameter that has to be considered for the evaluation of the energy transmission cost is the investment that is required for the installation of each transmission system. The costs for the components that are in included in each transmission system are presented with respect to the transmission technology that they implement. Details concerning the cost models used and the assumptions made can be found in [15].

A. HVAC cost of components and total investment cost

The cost of the components of the HVAC transmission systems, with the characteristics described by Todorovic [3] (see also [4]) are presented in *Table XIV* and *XV*.

TABLE XIV
COST OF COMPONENTS USED IN HVAC TRANSMISSION SYSTEMS.

Cables				
Voltage rating	132 kV	220 kV	400 kV	
Cost (M€/km)	1.5	1.65	1.95	
Cable laying cost	0.1 M€/km for each cable			
Switch gear				
Voltage rating	33 kV	132 kV	220 kV	400 kV
Cost (M€)	0.058	0.0124	0.183	0.303
Transformers				
Power rating	300 MVA	400 MVA	500 MVA	600 MVA
Cost (M€)	2.43	3.00	3.54	4.06
Compensators				
Cost set to 2/3 of the cost of transformer with the same MVA rating				

TABLE XV
TOTAL INVESTMENT COST FOR THE PROPOSED HVAC SOLUTIONS.

M€	500 MW windfarm			1000 MW windfarm		
Transmis. Distance	132 kV	220 kV	400 kV	132 kV	220 kV	400 kV
50 km	250	185	109	419	282	219
100 km	491	361	213	821	546	428
150 km	732	538	318	1223	811	636
200 km	973	714	1675	1625	1429	2934
250 km	1214	1332	-	2429	2664	-
300 km	1937	-	-	3875	-	-

B. HVDC LCC cost of components and total investment cost

The cost of the components of HVDC LCC transmission systems with the characteristics suggested by Barberis Negra [6] are presented in *Table XVI*.

TABLE XVI
COST OF COMPONENTS USED IN HVDC LCC TRANSMISSION SYSTEMS.

HVDC LCC station				
Cost set to 0.08 €/VA				
Mass impregnated insulation cables				
Power rating	600 MW	500 MW	440 MW	250 MW
Cost (M€/km)(1)	0.844	0.730	0.660	0.443

(1): Cable installation cost included

According to these component costs the total investment cost for the proposed HVDC LCC transmission systems are the ones given in *Table XVII*.

TABLE XVII
TOTAL INVESTMENT COST FOR THE PROPOSED HVDC LCC SOLUTIONS.

M€	500 MW			1000 MW			
Transmis. distance	500 CS	2x250 CS	600 CS	2x500 CS	600 CS+ 440 CS	600 CS+ 500 CS	2x600 CS
50 km	116	124	138	233	241	254	276
100 km	153	168	180	306	316	333	360
150 km	189	212	222	379	392	412	445
200 km	226	257	264	452	467	490	529
250 km	162	301	307	525	542	569	614
300 km	299	345	349	598	617	648	698

C. HVDC VSC cost of components and total investment cost

The cost of the components of HVDC LCC transmission systems with the characteristics suggested by Barberis Negra [6] are presented in *Table XVIII*. According to these component costs the total investment cost for the proposed HVDC LCC transmission systems are the ones given in *Table XIX*.

TABLE XVIII
COST OF COMPONENTS USED IN HVDC VSC TRANSMISSION SYSTEMS.

HVDC VSC station			
Cost set to 0.11 €/VA			
Polymeric Excursion DC cables pair			
Power rating	220 MW	350 MW	500 MW
Cost (M€/km)	0.3037	0.4453	0.6086
Cable laying cost	0.2 M€/km for each cable pair		

TABLE XIX
TOTAL INVESTMENT COST FOR THE PROPOSED HVDC VSC SOLUTIONS.

M€	500 MW windfarm			1000 MW windfarm	
Transmis. distance	350 +220 CS	2x350 CS	500 CS	3x350 CS	2x500 CS
50 km	182	218	150	327	300
100 km	240	283	190	424	381
150 km	297	347	231	521	462
200 km	355	412	271	618	543
250 km	412	476	312	714	624
300 km	470	541	352	811	705

VIII. DISCUSSION OF RESULTS

Using the result of the transmission losses, energy unavailability and investment cost the total transmission cost of energy for the different transmission system technologies can be calculated. The overall results show that for large offshore wind farms (≥ 500 MW) and a distance of up to about 55 km, the HVAC transmission technology leads to the lowest energy transmission cost of all three transmission technologies.

For longer distances, our results so far indicate slight cost advantages for the HVDC LCC solution compared to the HVDC VSC solution, however, this is mainly influenced by the results of our reliability calculations. As the reliability calculations for the HVDC VSC solution is based on many assumptions, we like to emphasis that more data about the reliability of HVDC VSC solutions is needed before final evaluation can be performed.

Furthermore, it must be noted that our costs evaluation neither considers the costs for the offshore platforms nor for a possible onshore grid upgrade. For HVDC VSC systems the offshore platforms would be smaller than the one used in LCC solutions but larger than the platforms used in HVAC systems. The cost impact influenced by the size of the offshore platform will depend on the water depth. Including the cost for a possible grid upgrade would aggravate mostly HVAC and HVDC LCC transmission systems since these systems do not present independent active and reactive power control while this feature is available in HVDC VSC systems.

IX. CONCLUSIONS

Interest on large offshore wind farms has increased in the last years and many studies are under development. Design and specification of the transmission system to shore is of the critical parts for the development of very large (>>200 MW) offshore wind farms.

In this paper an attempt for an evaluation of the three different transmission technologies (HVAC, HVDC LCC and HVDC VSC) has been carried out. The several systems were configured in order to transmit power from a 500 MW and 1000 MW offshore wind farm respectively. The wind average speed was considered to be 9 m/sec. Besides the power losses the investment cost, the energy availability of the transmission

system was also considered as a parameter for the evaluation of the energy transmission cost.

The overall results show that for a distance of up to about 55 km, the HVAC transmission technology leads to the lowest energy transmission cost of all three transmission technologies. For longer distances, our results so far indicate slight cost advantages for the HVDC LCC solution compared to the HVDC VSC solution; however, this is mainly influenced by the assumptions in our reliability calculations.

To be able to do a more precise evaluation of HVDC LCC and HVDC VSC technology, we need more data particular about the reliability of HVDC VSC technology. We particular like to encourage the operator of HVDC VSC technology to publish the relevant reliability data.

X. References

[1] Information found at http://home.wxs.nl/~windsh/offshore.html (last visit January 2005).

[2] Gasch R., and Twele J., 'Wind Power Plants: Fundamentals, Design and Operation', Solar praxis AG, Germany, 2001.

[3] Todorovic J., 'Losses Evaluation of HVAC Connection of Large Offshore Wind Farms', Master Thesis, Royal Institute of Technology, Stockholm, Sweden, December 2004.

[4] Barberis Negra, N., Todorovic, J. and Ackermann, T., "Loss Evaluation of HVDC and HVDC Transmission Solutions for Large Offshore Wind Farms", in Proceedings of Fifth International Workshop on Large-Scale Integration of Wind Power and Transmission Networks for Offshore Wind Farms, Editor: T. Ackermann, 7-8 April 2005, Glasgow, Scotland.

[5] Brakelmann H., 'Efficiency of HVAC Power Transmission from Offshore-Windmills to the Grid', IEEE Bologna PowerTech Conference, Bologna, Italy, June 23-26, 2003.

[6] Barberis Negra N., 'Losses Evaluation of HVDC Solutions for Large Offshore Wind Farms', Master Thesis, Royal Institute of Technology, Stockholm, Sweden, January 2005.

[7] Rudolfsen F., Balog G.E., Evenset G., 'Energy Transmission on Long Three Core/Three Foil XLPE Power Cables', JICABLE – International Conference on Insulated power cables, 2003.

[8] 'Losses of converter station', www.siemens.com (last visit January 2005).

[9] List of projects found at www.abb.com (last visit January 2005).

[10] Christofersen D.J., Elahi H., Bennett M.G., "A Survey of the Reliability of HVDC Systems Throughout the World During 1993-1994", (CIGRE, Paris, 1996 Report 14-101).

[11] Vancers I., Christofersen D.J., Bennett M.G., Elahi H., "A Survey of the Reliability of HVDC Systems Throughout the World During 1997-1998", (CIGRE, Paris, 2000 Report 14-101).

[12] Vancers I., Christofersen D.J., Leirbukt A., Bennett M.G., "A Survey of the Reliability of HVDC Systems Throughout the World During 1999-2000", (CIGRE, Paris, 2002 Report 14-101).

[13] Vancers I., Christofersen D.J., Leirbukt A., Bennett M.G., "A Survey of the Reliability of HVDC Systems Throughout the World During 2000-2002", (CIGRE, Paris, 2004, Report 14-101).

[14] Canadian Electricity Association, "Forced Outage Performance of Transmission Equipment 1998-2002", Canadian Electricity Association, Montreal, Canada, 2004.

[15] Lazaridis L., 'Economic Comparison of HVAC and HVDC Solutions for Large Offshore Windfarms under Special Consideration of Reliability', Master Thesis, Royal Institute of Technology, Stockholm, Sweden, February 2005.