Offshore wind conference

Bo Normark

Erik Koldby Nielsen

Advanced power electronics for cable connection of offshore wind

© ABB Group - 1 -
31-Oct-05

The problem

- Increasing distance to shore
- Increasing wind farm power
- Increasing distance on shore to grid interconnection point

- Consequences
  - Need for increased transmission voltage
  - Reach of limits for 3-core AC cables
    (Length/power transmission capability)
    The paper ”AC able solutions for Offshore Wind Energy” presented at the Poster session this afternoon give an overview of the technical challenges.
  - Land connection may be overhead line – if you can afford to wait for the permits.

© ABB Group - 2 -
31-Oct-05

What is HVDC Light®?

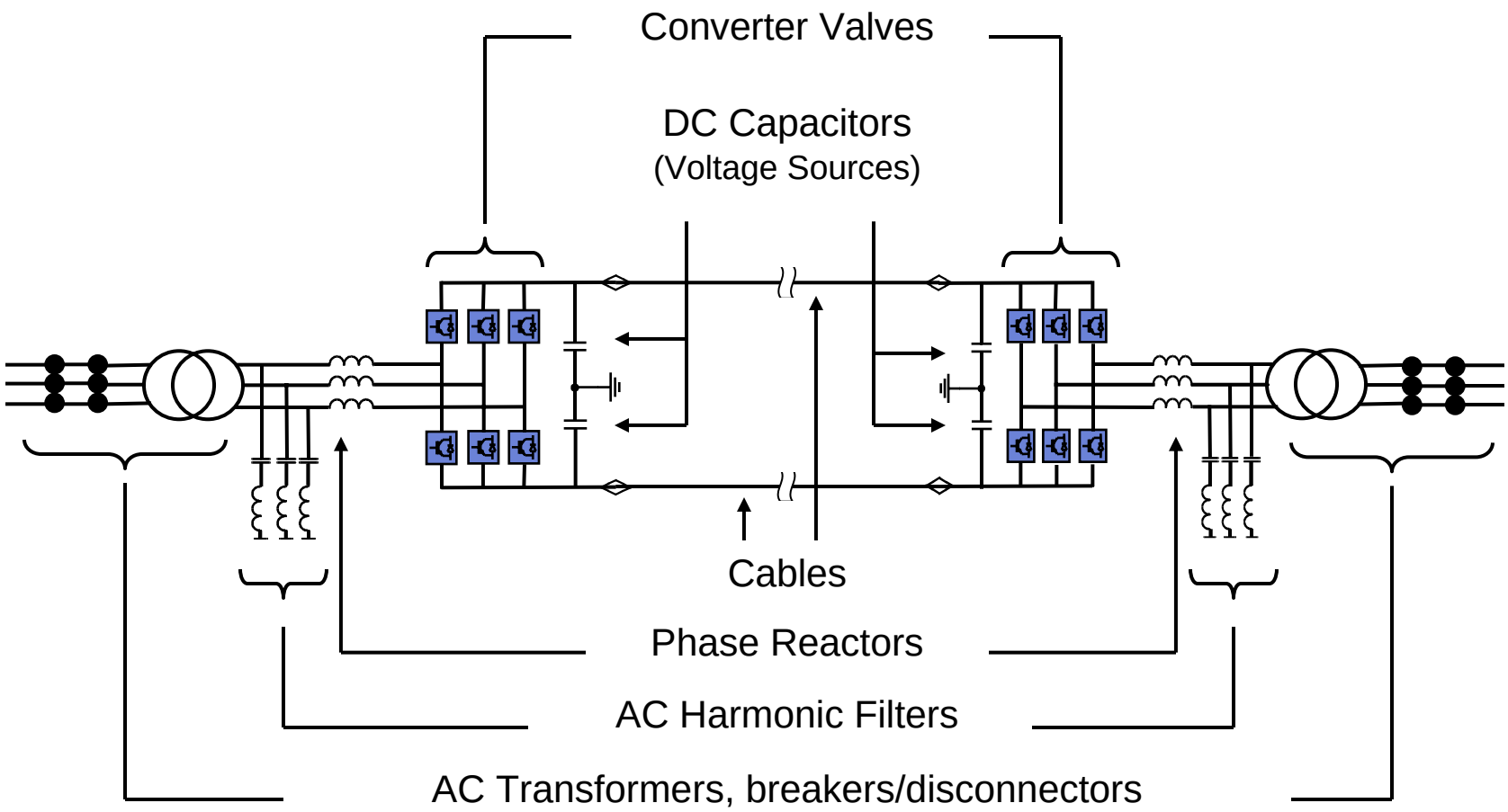

Simplified diagram for a HVDC Light® transmission

© ABB Group - 3 -
31-Oct-05

HVDC Light® versus classic HVDC

HVDC Light®	HVDC Classic
Size 50 – 550 MW	Size 150 – 1500 MW
Self commutated/IGBT	Line commutated/Thyristor
Relative volume 1	Relative volume 4 - 6
XLPE cable	Mass Impregnated Paper Oil/Paper
Continuous reactive power control	Switched reactive power regulation
Extensive voltage control	Limited voltage control
Fault ride through	no
Black start capability	no
No requirement on minimum SCC	Minimum SCC >2.0 x rated power
Power reversal without interruption	no
No generator needed on platform	Generator needed on platform
No minimum DC power	Limitations om minimum DC power
Typical convertor losses 1.6%	Typical convertor losses 0.8%
5 years operating experience	> 20 years operating experience
Operating experience off-shore	no

© ABB Group - 4 -
31-Oct-05

Why HVDC Light®?

- Easy grid code compliance
  - Voltage support at the grid interconnection point
  - Stabilisation of reactive power
  - Decoupling grid incidents and turbine operation
  - Decoupling turbine and grid frequencies
  - Mitigation of flicker problems
- Reduced stresses on turbines
  - Stabilisation of voltage in collection grid
  - Simplified drive through
    Note: The HVDC light will act as a powerful STATCOM during incidents in the collection grid. However, the turbines must be able to perform drive through for those. See also the paper “New method and hardware for grid-connection of wind turbines and parks” presented at the poster session.

© ABB Group - 5 -
31-Oct-05

Proven technology

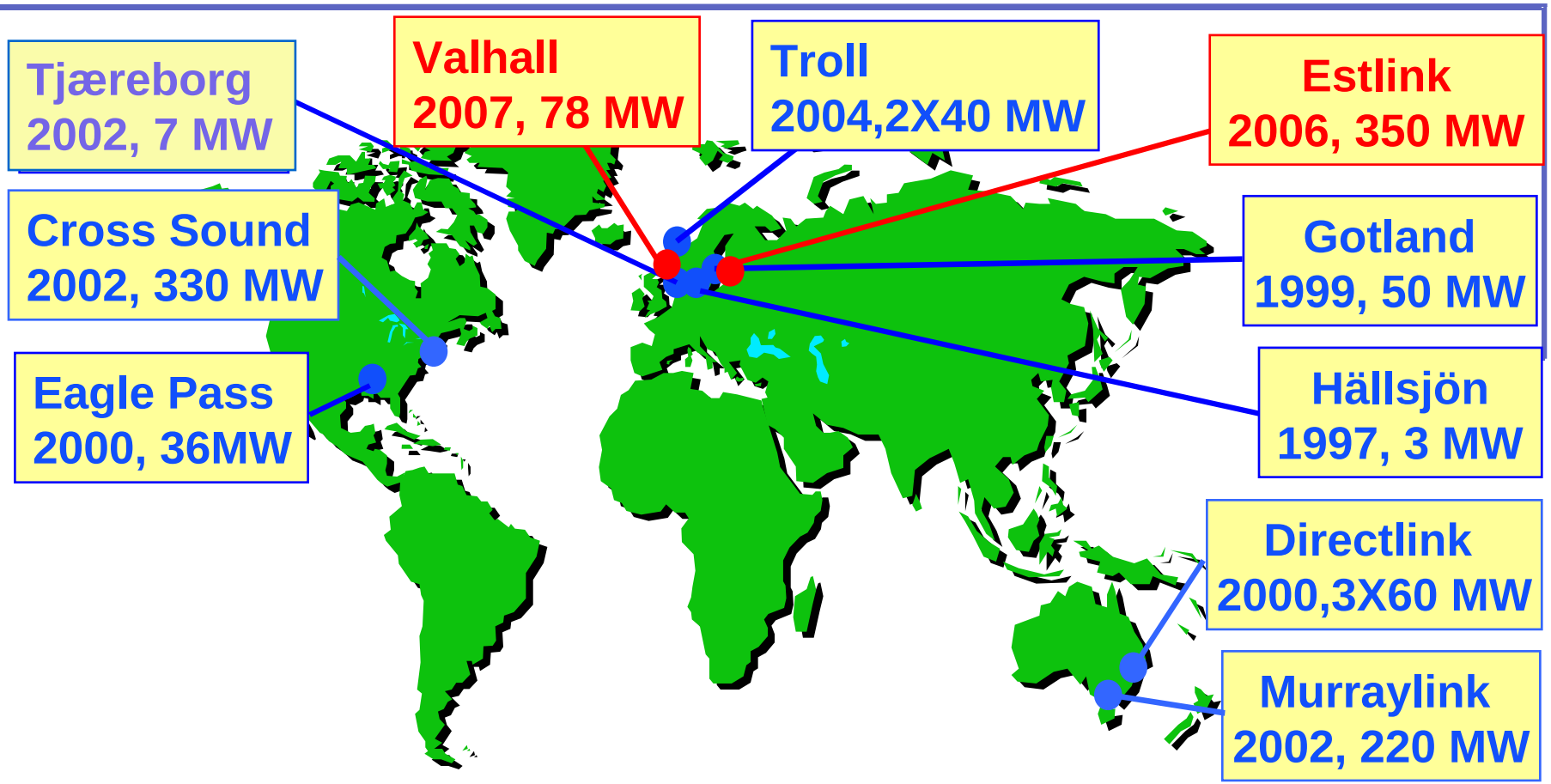

8	HVDC Light Projects	in service
2	HVDC Light Projects	under construction

© ABB Group
31-Oct-05

Proven technology

Troll - a HVDC Light® offshore plant in service!

© ABB Group - 7 -
31-Oct-05

Improvements on cost/performance ratio

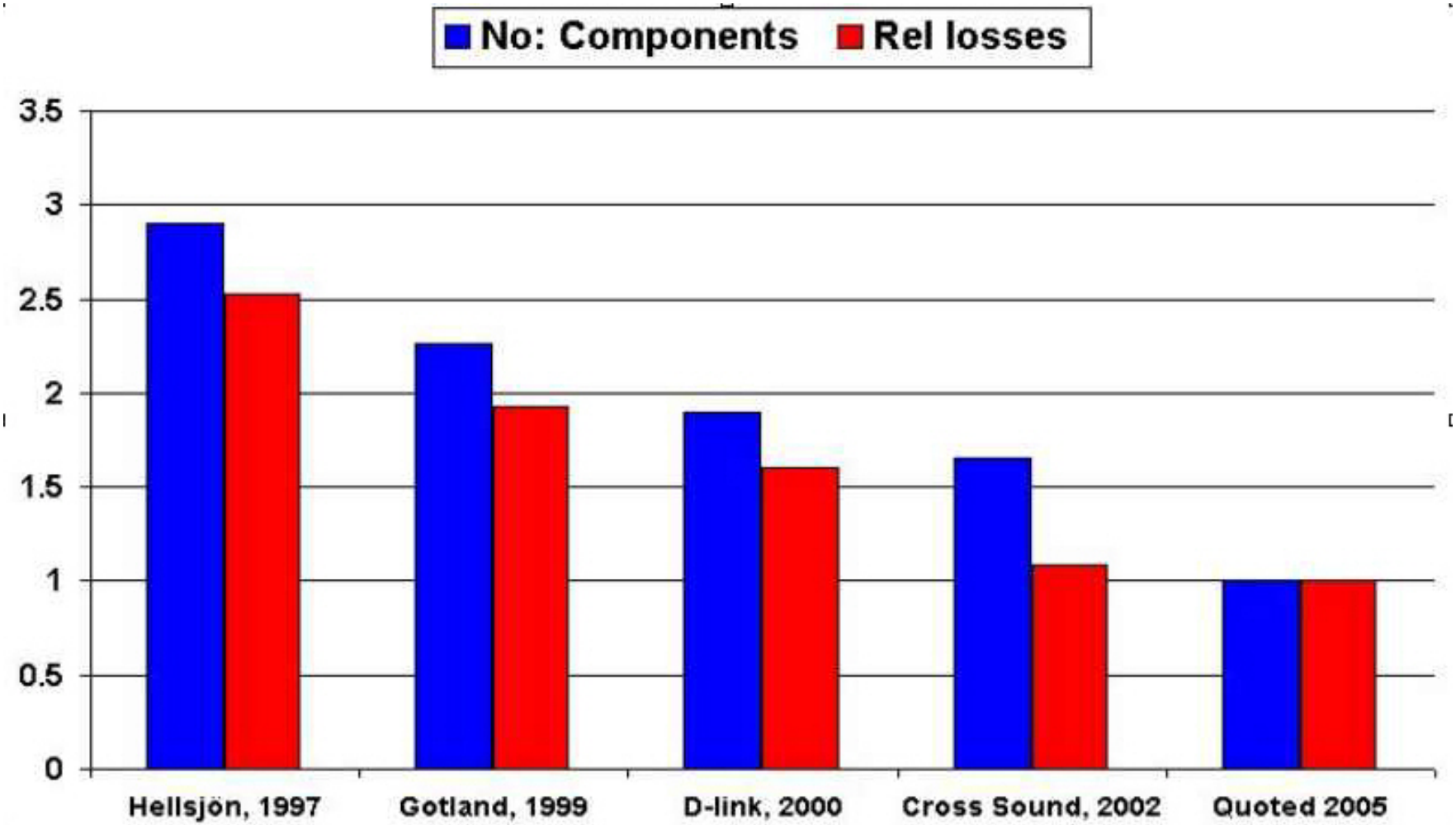

Development of HVDC Light® designs and losses

© ABB Group - 8 -
31-Oct-05

When is HVDC Light® interesting?

- Need for power transmission 200 - 1000 MW
  - Distance more than 50 km
  - Difficult to find/reach interconnection point in the grid
  - Difficult to obtain permits for OH-lines / coastal substation for reactive compensation
  - Need for high availability despite high fault rate on OH lines
- Weak AC network
  - Need for accurate and fast control of power, voltage and reactive power
  - Risk for dynamic instability
  - Other Power quality issues
  - Risk of low harmonic resonance
- Advantages of or need for black start capability
- Need for compact offshore module

Summary

- HVDC Light is proven semeiconductor technology with large number of components in service with identical voltage
- Simple and robust convertor technology
- Good dynamic properties
- Low losses
- Reduced costs

ABB