Implementation of a Finite Element Foundation Module in Flex5 using Craig Bampton Substructuring

Tue Hald
Loads Aerodynamics and Control, Technology

Copenhagen Offshore Wind
October 2005

Outline of Presentation

- Vestas Turbine Simulator
- Existing foundation module
- Improved foundation module
- Craig Bampton substructuring
- Test case
- Conclusion

Vestas Turbine Simulator

Aeroelastic modelling tool

(Internal Loads)

- 36 DOF combined mode shape and multibody formulation
- Each sub-structure treated using linear Bernoulli-Euler beam theory
- Bearings/Actuators modelled by lumped parameter models
- Power control (Vestas)
  - Implemented directly in FLEX5 using DLLs
- Inertia forces are based on the deformed state
- Fundation model treated separately in FLEX5

External Loads

- Aerodynamic load model based on Blade Element Momentum theory
- Hydrodynamic load model based on Morison Equation w/o McCamy Fuchs correction

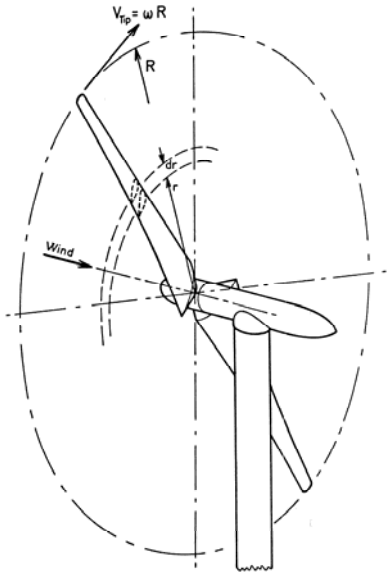

All loads are applied in deformed state

Vestas Turbine Simulator

- Wind and turbulence
  - mean wind
  - log. wind shear / table
  - IEC deterministic gusts
  - skewed inflow
  - tower shadow models
  - Veers turbulence model
  - Mann turbulence model

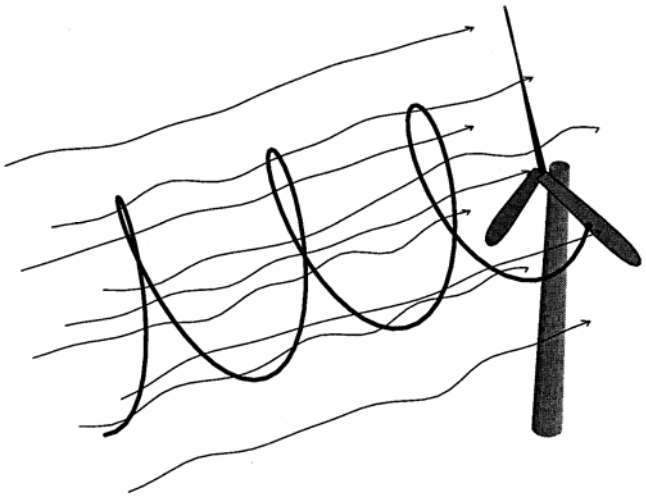

- Waves and current
  - 1 order irregular Airy waves (generic/custom wave spectra)
  - Wheeler stretching
  - 2. order irregular Stoke waves
  - Stream function regular wave
  - Constrained wave
  - Current profile (power)

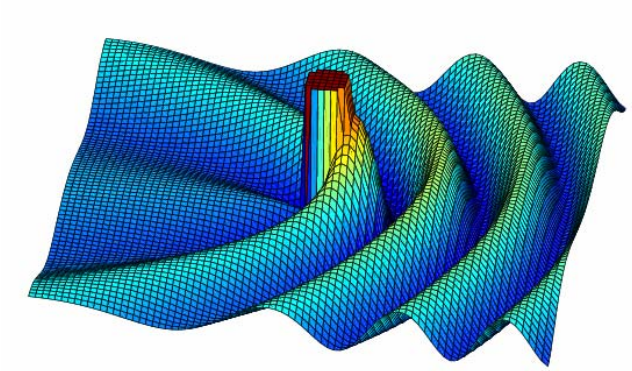

Existing foundation module

Existing Flex5 foundation module features:

- 2 shape functions
- 6 DOF (Fx,Fy,Fz,Mx,My,Mz) at interface
- Fixity constraint below mudline calibrated to 1. mode natural frequency
- Monopile or equivalent monopile with identical kinematics at interface

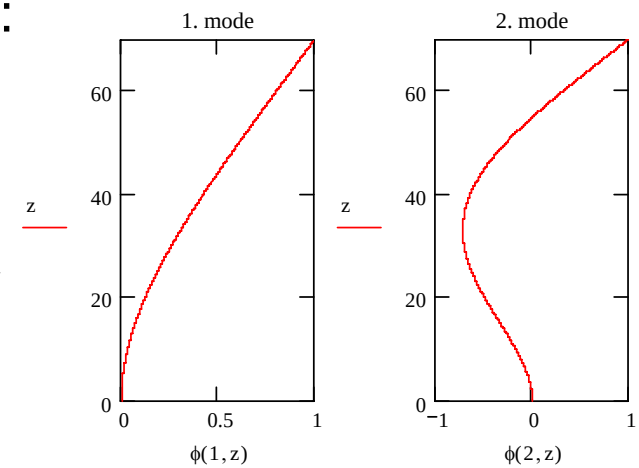

Why ?

- Ability to model soil-structure interaction
- Ability to accommodate increasing demand for more complex structures

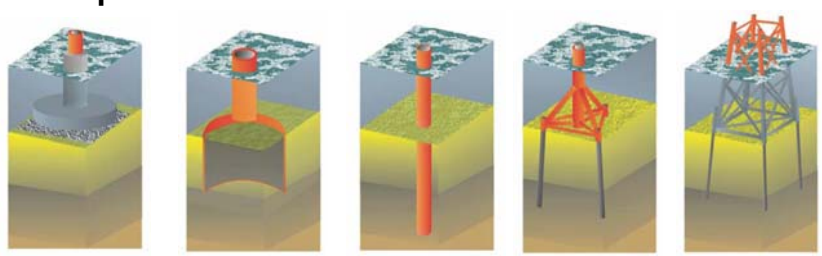

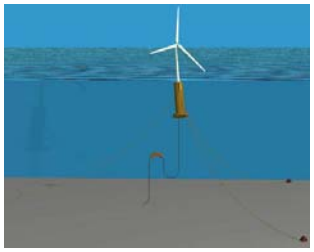

Courtesy: P. Passon

Increasing water depth

Improved foundation module

3D space-frame structure of arbitrary geometry:

- Floating model based on stiff elements is working.

  The transformation to the interface is based on a stiff body transformation

  $\overline{\overline{M}}, \overline{\overline{I}}, CoG$

- Internal flexibility by FE model using tubular Timoshenko beam elements

- Craig-Bampton substructuring for decomposing FE model to 6 DOF in Flex 5 to retain modal scheme

Courtesy: Gunnar Britse

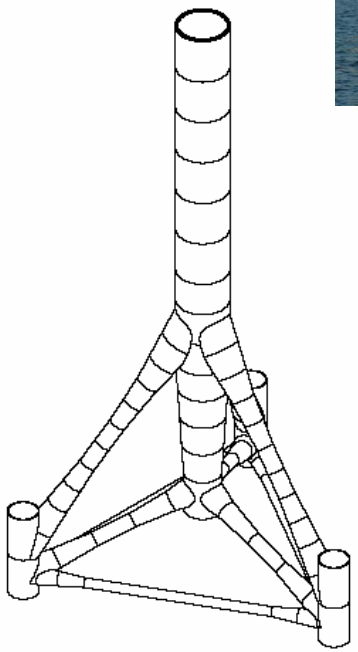

Floating foundation module

Courtesy: Norsk Hydro

- Arbitrary geometry and 3D wave field
- Description of mass matrix (incl. added mass)
- Description of external loads
  - Structural inertia forces (linear terms incl. in mass matrix)
  - Gravity
  - Elastic or pretensioned anchor cables
  - Hydrodynamic forces (Buoyancy and Morison loading)

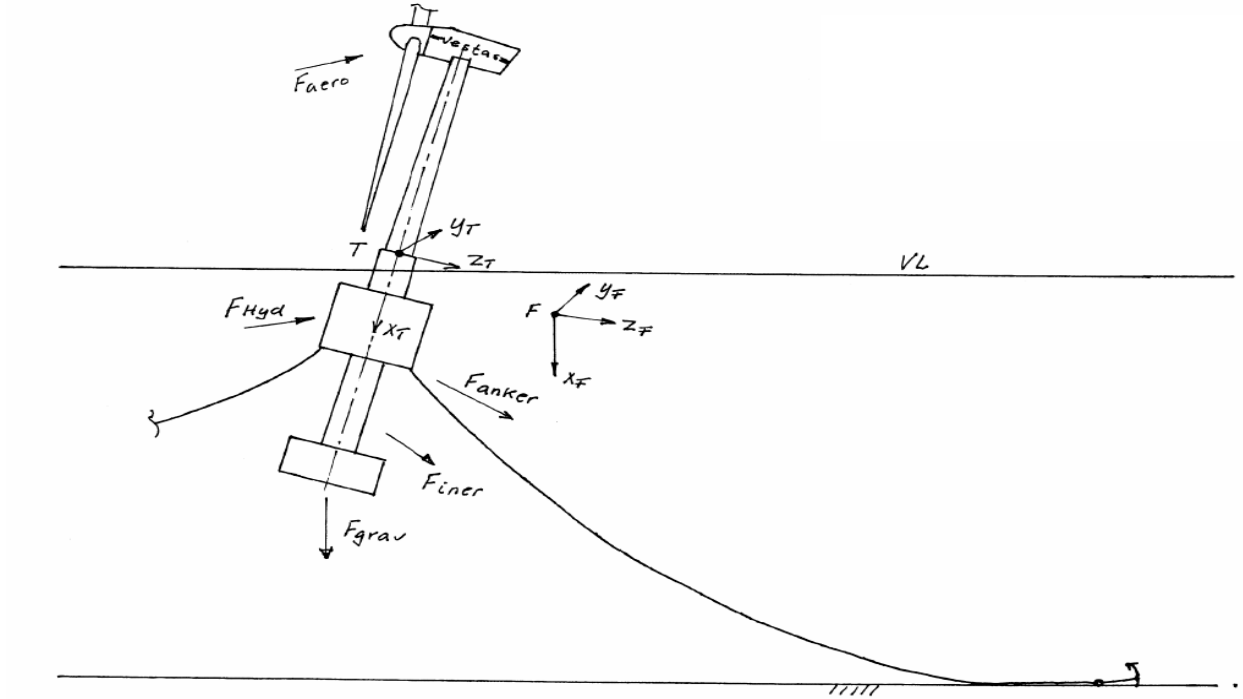

Thimoshenko Beam Elements

- Tubular Thimoshenko beam element:
  - 6 DOF at each node
  - Outer diameter
  - Plate thickness
  - Water filling factor, 1 for full and 0 for empty
  - Mass and stiffness factor
  - Drag and added mass coefficient in normal and tangential direction

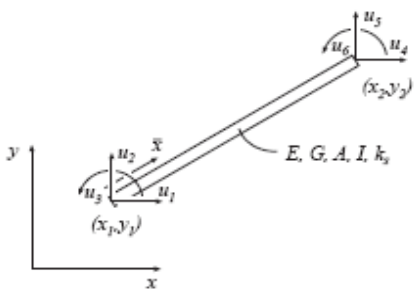

12x12 stiffness and mass matrix

$$
[K_e] = \begin{bmatrix}
\frac{12EI_y}{l^3}\rho_y & & & & \frac{6EI_y}{l^2}\rho_y & -k_{11} & & & k_{15} & -k_{16} \\
 & \frac{12EI_x}{l^3}\rho_x & & -\frac{6EI_x}{l^2}\rho_x & & & -k_{22} & k_{24} & & -k_{26} \\
 & & \frac{EA}{l} & & & & & -k_{33} & & \\
 & & & \frac{4EI_x}{l}\alpha_x & & & -k_{24} & & \frac{2EI_x}{l}\beta_x & -k_{46} \\
 & & & & \frac{4EI_y}{l}\alpha_y & -k_{15} & & & \frac{2EI_y}{l}\beta_y & -k_{56} \\
 & & & & & \frac{GI_z}{l} & -k_{16} & -k_{26} & k_{46} & k_{56} & -k_{66} \\
 & & & & & & k_{11} & & & -k_{15} & k_{16} \\
 & & \text{Symmetric} & & & & & k_{22} & & & \\
 & & & & & & & k_{33} & -k_{24} & & k_{26} \\
 & & & & & & & & k_{44} & & -k_{46} \\
 & & & & & & & & & k_{55} & -k_{56} \\
 & & & & & & & & & & k_{66}
\end{bmatrix}
$$

Soil-structure interaction

- Soil-structure interaction enables load assessment below mudline and natural frequency evaluation
- Soil Models:
  1. Soil stiffness matrix applied at mudline (incl associated inertia)
  2. Soil forces are applied as external loads to elements:
     i. Linear stiffness model with linearization of p-y curves at COD loads
     ii. Non-linear stiffness model with full p-y curves

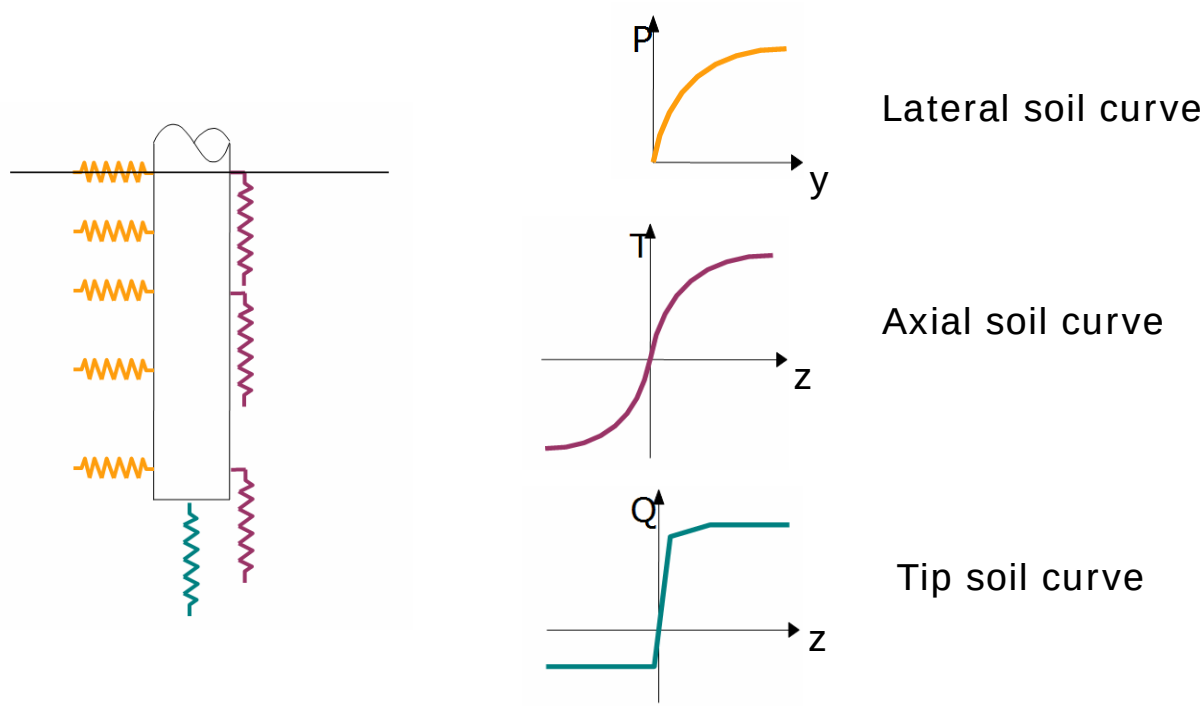

Improved time integrator

FEM results in stiff systems, i.e. a large ratio between highest and lowest eigenfrequency

- Original time integrator:
  - 4 step Runge-Kutta-Nustrøm (RKN) integrator for 2. order differential equation
  - RKN time integrator is only *conditionally* stable as it requires minimum 3 steps pr. period of each mode, i.e. a very small time step required to resolve the highest frequencies

- Implementation of improved time integrator:
  - Newmark-Wilson algorithm for step-by-step integration:
    1. EOM: $\boldsymbol{M}\,\ddot{u} + \boldsymbol{C}\,\dot{u} + \boldsymbol{K}\,u = F^{G}$
    2. EOM on incremental form: $\boldsymbol{M}_0\,\Delta\ddot{u} + \Delta\boldsymbol{M}\,\ddot{u} + \boldsymbol{C}\,\Delta\dot{u} + \boldsymbol{K}\,\Delta u = \Delta F^{G}$
    3. Taylor expansion of in u_0 $\Delta\ddot{u},\ \Delta\dot{u},\ \Delta u$
    4. Solution of effective equation: $\boldsymbol{K}^{*}\Delta u = \Delta F^{*}$
  - Unconditionally stable

Craig-Bampton method

A practical method for solving large dynamic problems i than required by a full FE solution.

- Method for reducing the size of the FE model to a 6 DOF superelement at the CB boundary, i.e. with coupling to Flex5 at the interface (TB)
- Accounts for both mass and stiffness (unlike Guyan)
- Combines motion of boundary points with modes of the structure assuming the boundary points are held fixed
- Load transformation matrices (LTM) are used to transform from CB DOFs to physical DOFs
- Similar to other reduction schemes:

Guyan Reduction: $\{u\} = \phi\{u_r\}$ where $[\phi] = -[K_{cc}]^{-1}[K_{cr}]$
$\{u_r\}$ = remaining DOFs

Modal decoupling: $\{u\} = \phi\{q\}$ where $[\phi]$ = model shapes
$\{q\}$ = modal DOFs

CB method: $\{u\} = \phi\{u_{CB}\}$ where $[\phi]$ = CB transformation
$\{u_{CB}\}$ = CB DOFs (boundary + modes)

Craig-Bampton method

Craig-Bampton theory

- Equation of motion (ignoring damping):

$$[M]\{\ddot{u}\} + [K]\{u\} = \{F(t)\}$$

- The Craig-Bampton transform is defined as:

$$\{u\} = \begin{Bmatrix} u_b \\ u_i \end{Bmatrix} = \begin{bmatrix} I & 0 \\ \phi_c & \phi_i \end{bmatrix} \begin{Bmatrix} u_b \\ q \end{Bmatrix} = [\phi_{CB}] \begin{Bmatrix} u_b \\ q \end{Bmatrix}$$

where

u_b = boundary DOFs

u_i = internal DOFs, i.e. $\{u_i\} = \phi_c^T \{u_b\} + \phi_i^T \{q\}$

ϕ_c = rigid body modes (or static modes) containing the displacement influence coefficients for internal DOFs

ϕ_i = Fixed base mode shapes containing the contribution from internal vibration modes

ϕ_{CB} = Craig-Bampton transformation matrix

q = modal DOFs (Flex5 FE implementation q = 0)

- The modified equation of motion:

$$\phi_{CB}^T [M] \phi_{CB} \begin{Bmatrix} \ddot{u}_b \\ \ddot{q} \end{Bmatrix} + \phi_{CB}^T [K] \phi_{CB} \begin{Bmatrix} u_b \\ q \end{Bmatrix} = \phi_{CB}^T \begin{Bmatrix} F_b \\ F_i \end{Bmatrix}$$

Craig-Bampton method

Craig-Bampton tailored to Flex5

- Craig-Bampton transformation when $q=0$

$$\{u\} = \begin{Bmatrix} u_b \\ u_i \end{Bmatrix} = \begin{bmatrix} I \\ \phi_c \end{bmatrix} \{u_b\} = \begin{bmatrix} I \\ -K_{ii}^{-1} K_{ib} \end{bmatrix} \{u_b\}$$

- Condensed mass matrix, stiffness matrix and load vector

$$[M_{CB}] = \phi_{CB}^T [M] \phi_{CB} = \begin{bmatrix} I & \phi_c^T \end{bmatrix} \begin{bmatrix} M_{bb} & M_{bi} \\ M_{ib} & M_{ii} \end{bmatrix} \begin{bmatrix} I \\ \phi_c \end{bmatrix} = \phi_c^T [M_{ii}] \phi_c + [M_{bi}] \phi_c + \phi_c^T [M_{ib}] + [M_{bb}]$$

$$[K_{CB}] = \phi_{CB}^T [K] \phi_{CB} = \begin{bmatrix} I & \phi_c^T \end{bmatrix} \begin{bmatrix} K_{bb} & K_{bi} \\ K_{ib} & K_{ii} \end{bmatrix} \begin{bmatrix} I \\ \phi_c \end{bmatrix} = [K_{bb}] - \phi_c^T [K_{ii}] \phi_c$$

$$\{F_{CB}\} = \phi_{CB}^T \begin{Bmatrix} F_b \\ F_i \end{Bmatrix} = \begin{bmatrix} I & \phi_c^T \end{bmatrix} \begin{Bmatrix} F_b \\ F_i \end{Bmatrix} = \{F_b\} + \phi_c^T \{F_i\}$$

- Element (nodal) forces are calculated by inverse CB transformation from CB DOfs

- Internal mode shapes are neglected

FEM implementation

- How will the module be implemented in Flex:
  - Equation of motion for the turbine w/o foundation

$$\{u\} = \begin{Bmatrix} u_m \\ u_b \end{Bmatrix} = \begin{Bmatrix} \text{DOF for tower} + \text{nacelle} + \text{blades} + \text{hub} \\ \text{Boundary DOF for interface at b} \end{Bmatrix}$$

$$\begin{bmatrix} M_{mm} & M_{mb} \\ M_{bm} & M_{bb} \end{bmatrix} \begin{Bmatrix} \ddot{u}_m \\ \ddot{u}_b \end{Bmatrix} + \begin{bmatrix} K_{mm} & K_{mb} \\ K_{bm} & K_{bb} \end{bmatrix} \begin{Bmatrix} u_m \\ u_b \end{Bmatrix} = \begin{Bmatrix} F_m \\ F_b \end{Bmatrix}$$

  - Equation of motion for the foundation

$$\{u\} = \begin{Bmatrix} u_b \\ u_i \end{Bmatrix} = \begin{Bmatrix} \text{Boundary DOF for interface at b} \\ \text{Internal DOF for foundation} \end{Bmatrix}$$

$$\begin{bmatrix} M_{bb} & M_{bi} \\ M_{ib} & M_{ii} \end{bmatrix} \begin{Bmatrix} \ddot{u}_b \\ \ddot{u}_i \end{Bmatrix} + \begin{bmatrix} K_{bb} & K_{bi} \\ K_{ib} & K_{ii} \end{bmatrix} \begin{Bmatrix} u_b \\ u_i \end{Bmatrix} = \begin{Bmatrix} F_b \\ F_i \end{Bmatrix}$$

  - Final equations of motion in Flex

$$\begin{bmatrix} M_{mm} & M_{mb} \\ M_{bm} & M_{bb} + M_{CB} \end{bmatrix} \begin{Bmatrix} \ddot{u}_m \\ \ddot{u}_b \end{Bmatrix} + \begin{bmatrix} K_{mm} & K_{mb} \\ K_{bm} & K_{bb} + K_{CB} \end{bmatrix} \begin{Bmatrix} u_m \\ u_b \end{Bmatrix} = \begin{Bmatrix} F_m \\ F_b + F_{CB} \end{Bmatrix}$$

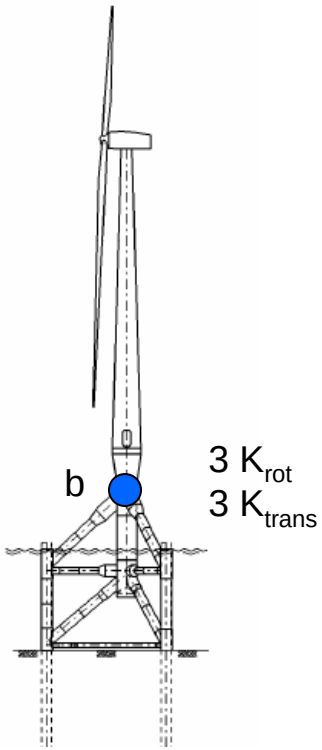

- Implement additional mode shapes if $q \neq 0$

Test case

- Simple test case:
  - WTG model: artificial V50 1000 kW
  - Monopile fixed at mudline -3m
    - OD=3.0m
    - t=30mm
  - Tower interface at 12.0m
  - Shear stiffness neglected, i.e. the Timoshenko elements converts to Bernoulli-Euler elements.
  - Steady wind speed: 12-14-16 m/s

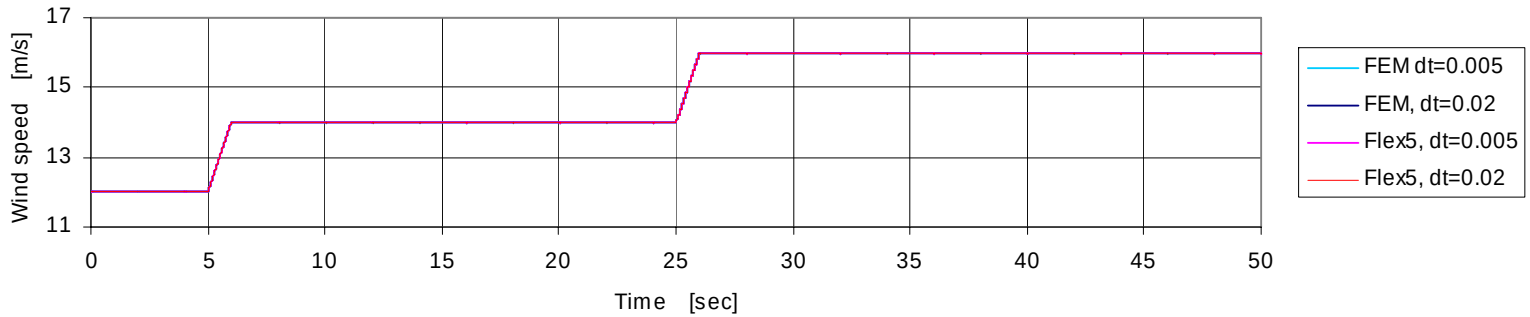

  - No wave loading

Test case

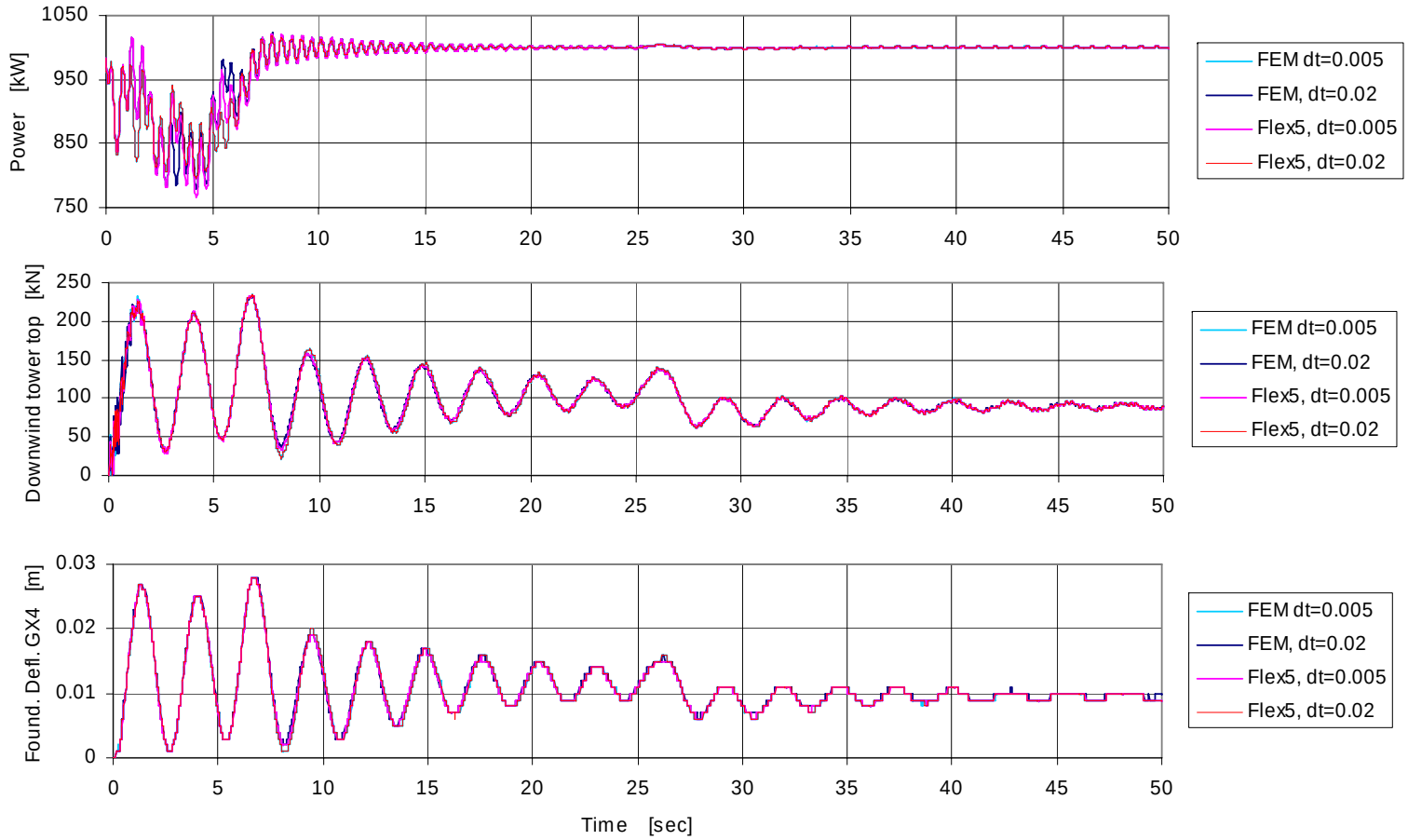

- Excellent agreement between org. Flex5 and FEM foundation module
- Deviations due to high frequency oscillations in axial and rotational direction

Outlook

Summary

- Premises for a fully general FE model using Timoshenko tubular beam elements have been described.
- The FE model is decomposed using Craig-Bampton substructuring in order to construct a super-element which fits in to the original modal scheme of Flex5.
- The FE model is prepared for full soil-structure interaction by soil springs or stiffness constraints

Future work

- Soil-structure interaction for various foundation concepts is part of a joint project between Vestas, Aalborg University, Risø, Elsam Engineering A/S and MBD supported by the Danish Energy Council.
- The soil-structure model will be verified against data from ongoing measurements from the Horns Reef wind farm.

Acknowledgement

- The former Vestas employee Erik Nim is gratefully acknowledged for initiating the work and for developing the floating foundation model.