National Renewable Energy Laboratory
Innovation for Our Energy Future

Overview of PreComp

TurbSim & Design Codes Workshop

September 22 – 25, 2008

Gunjit Bir

Operated for the U.S. Department of Energy Office of Energy Efficiency and Renewable Energy by Midwest Research Institute • Battelle

Background

- Composites allow
  - light-weight structures
  - complex geometries
- Currently, wind industry and researchers are examining composites tailoring to
  - improve turbine performance
  - mitigate loads and enhance stability

Composite Tailoring

Unbalanced lay-up of composite laminas

↓

coupled flap, edgewise and twist motions

↓

Aeroelastic interactions

↓

Influence loads, performance, and stability

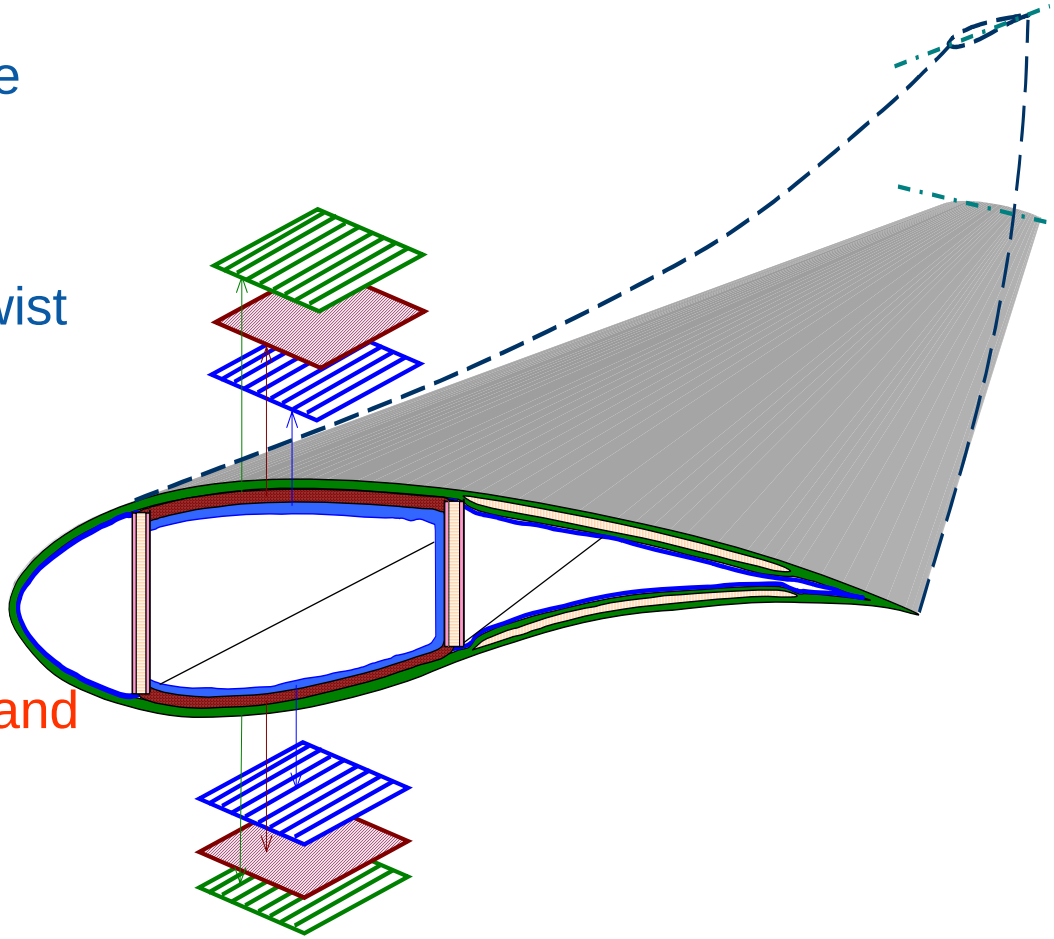

Challenges

Design & Analysis of Composite-Blade Wind Turbines

- Obtaining reliable blade properties
  (for conventional and aeroelastically tailored blades)
- Finding the right material couplings (for aeroelastically tailored blades)

Required:

- Structural characterization of composite blades (e.g., NuMAD/BPE, PreCOMP)
- Aeroelastic codes to design and analyze composite-blade turbines (e.g. HAWC, ADAMS; FAST not yet fully ready)

What PreComp does

- Given:
  - Blade external shape
  - Internal structural layup of composite laminas
- Computes:
  - Section properties at user-specified blade stations (direct and cross stiffnesses, inertias, locations of shear center and center of mass, orientation of principal axes)

PreComp: Preliminary Estimator of Composite Blade Properties

Structural Properties Characterization

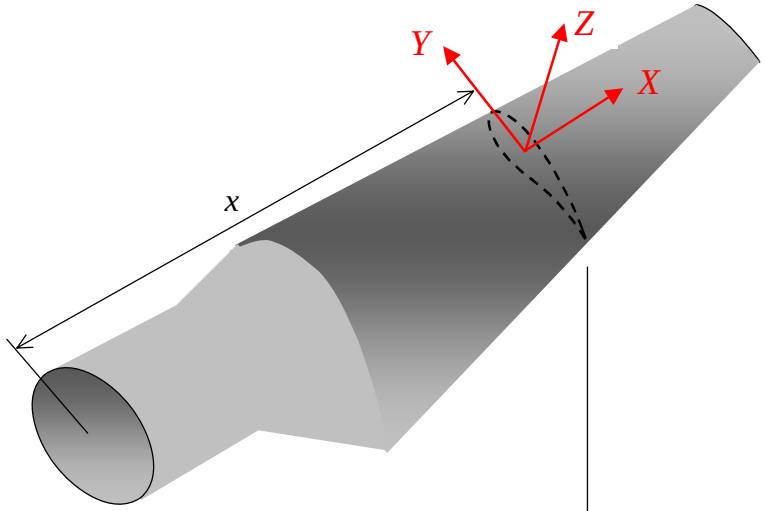

$$\begin{Bmatrix} F_X \\ M_Y \\ M_Z \\ T_X \end{Bmatrix} = \underbrace{\begin{bmatrix} \overline{EA} & S_{af} & S_{al} & S_{at} \\ S_{af} & \overline{EI}_{flap} & S_{fl} & S_{ft} \\ S_{al} & S_{fl} & \overline{EI}_{lag} & S_{lt} \\ S_{at} & S_{ft} & S_{lt} & \overline{GJ} \end{bmatrix}}_{\text{Section stiffness matrix}} \begin{Bmatrix} u_e' \\ w'' \\ v'' \\ \theta' \end{Bmatrix}$$

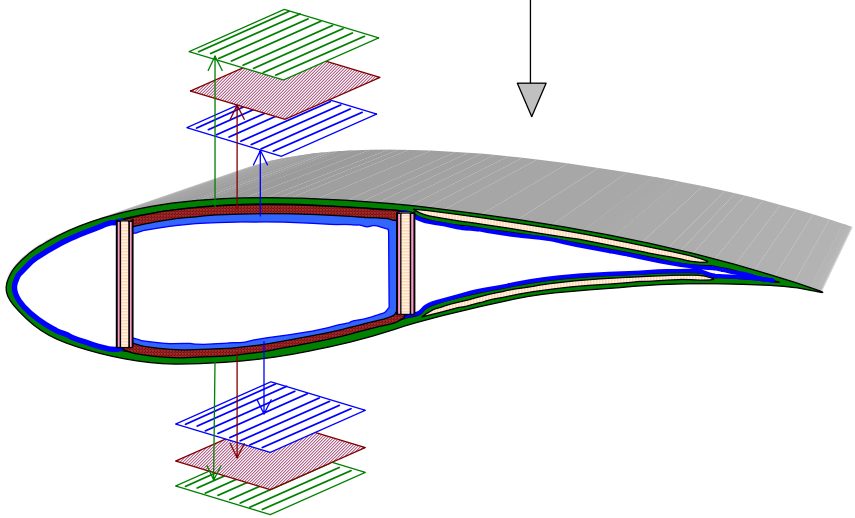

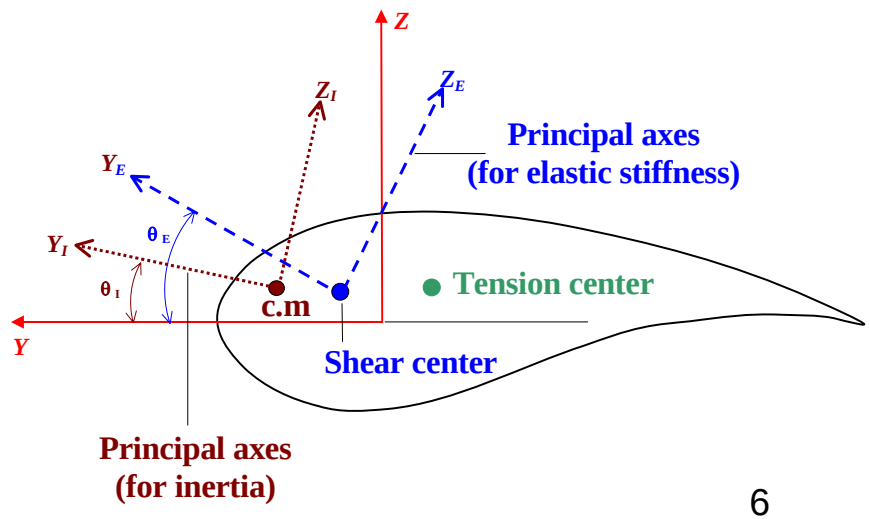

Inputs to PreComp

- Blade length
- Number and location of blade sections at which properties are required
- Number and location of webs
- Chord & twist
- Airfoil geometry
- Layup of composites

} at specified sections

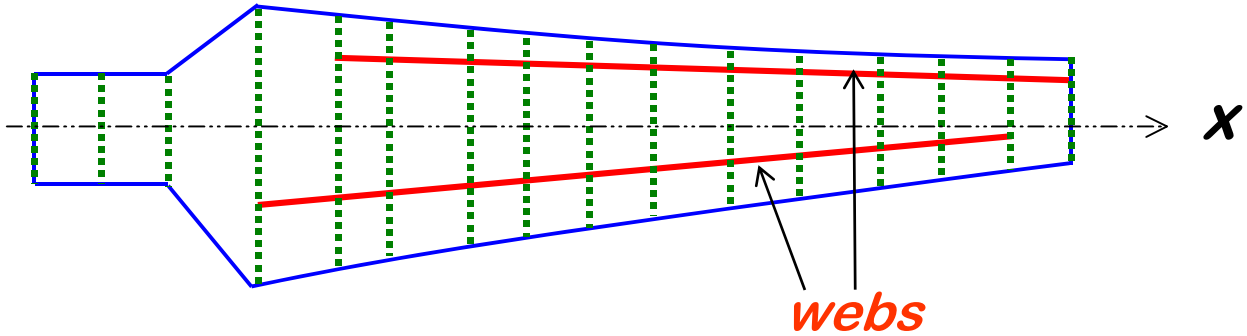

Airfoil Geometry Specification

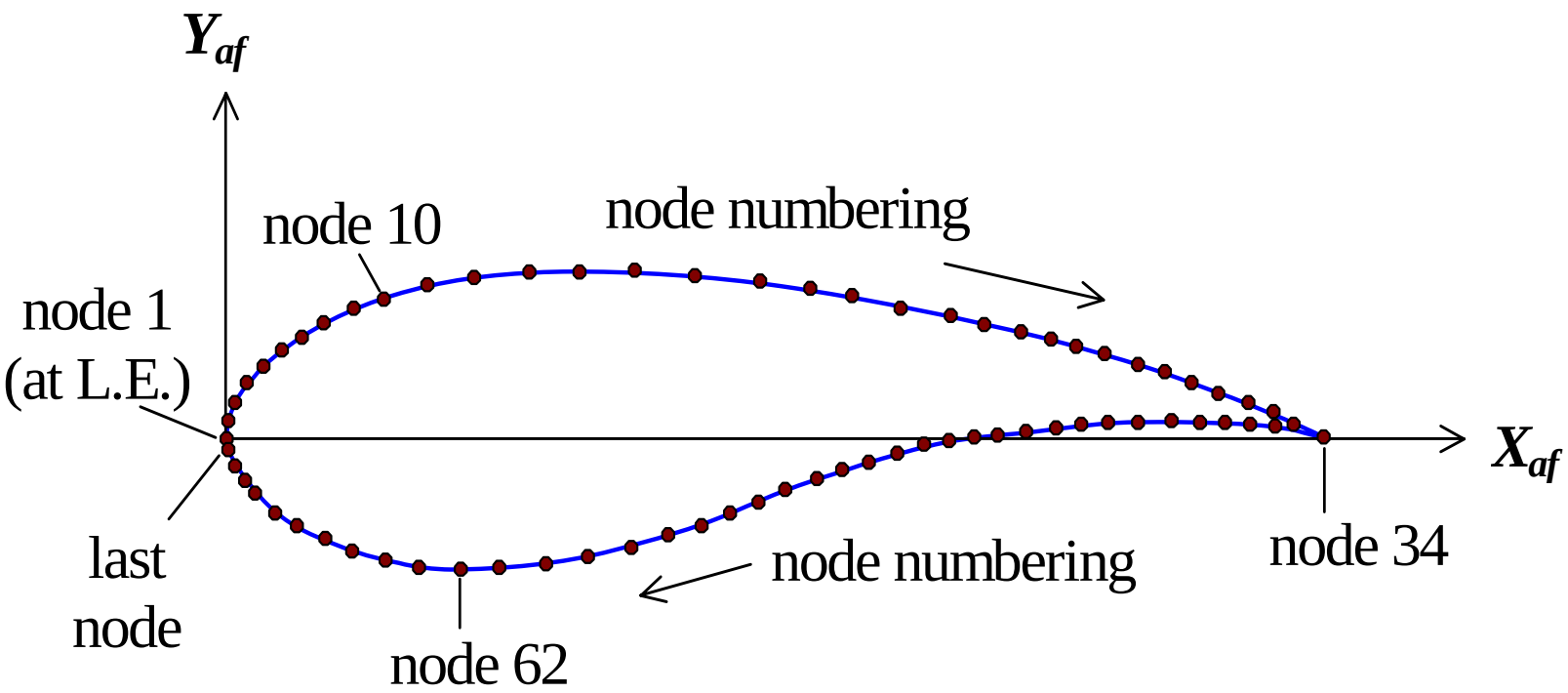

Composites Layup Specification

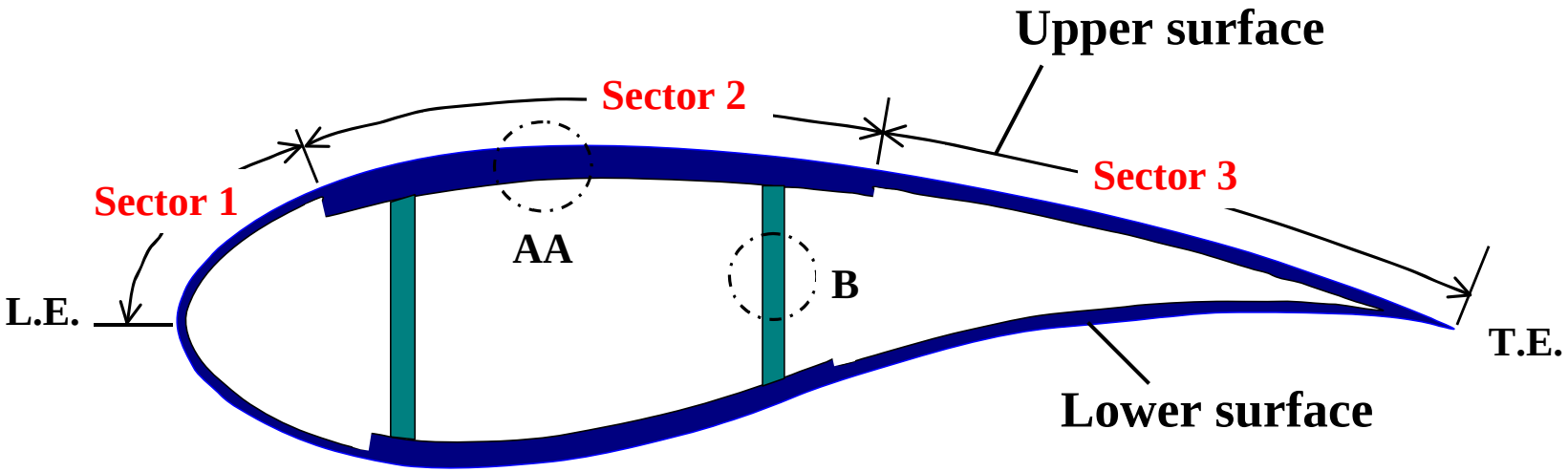

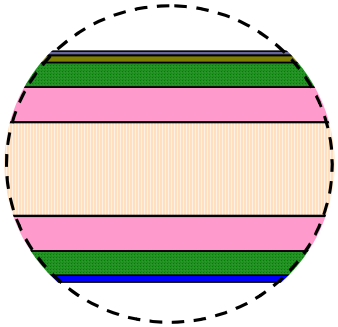

Laminas schedule at AA

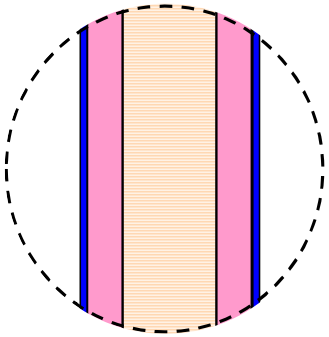

Laminas schedule at BB

Input Checks

Admissible Airfoil Geometries

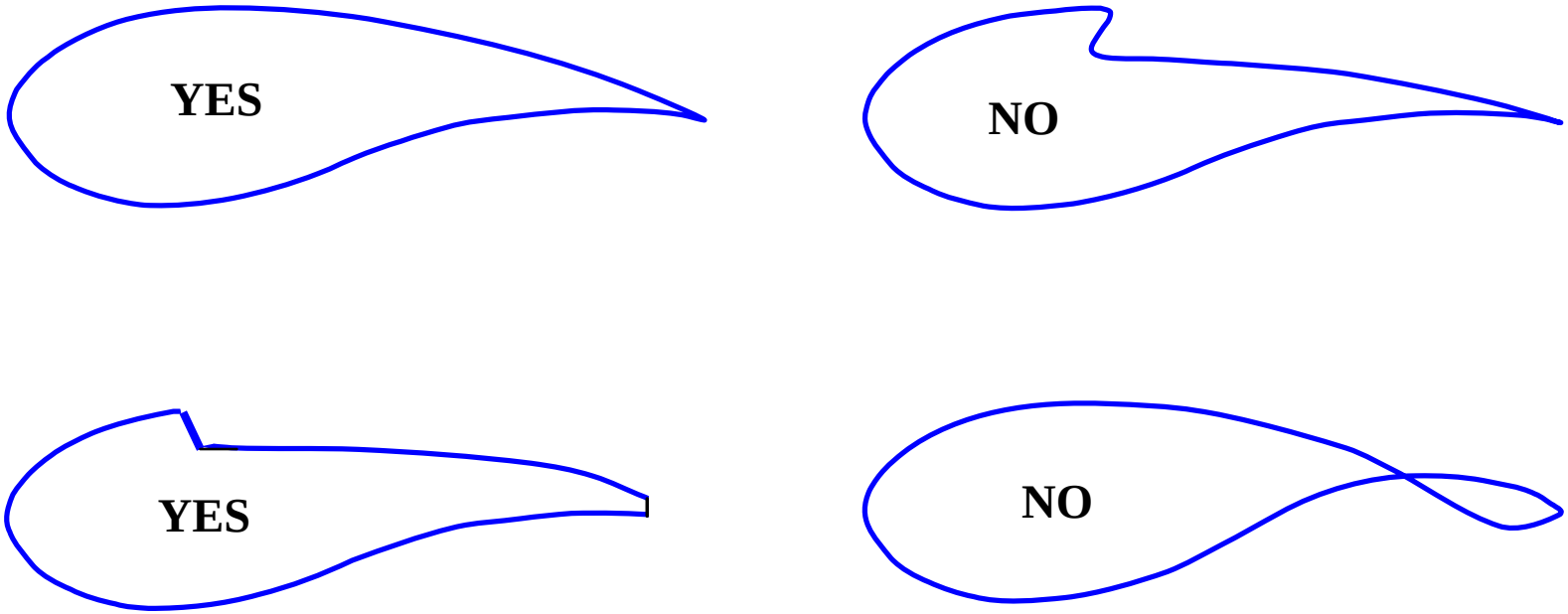

Input Checks

Admissible Web Geometries

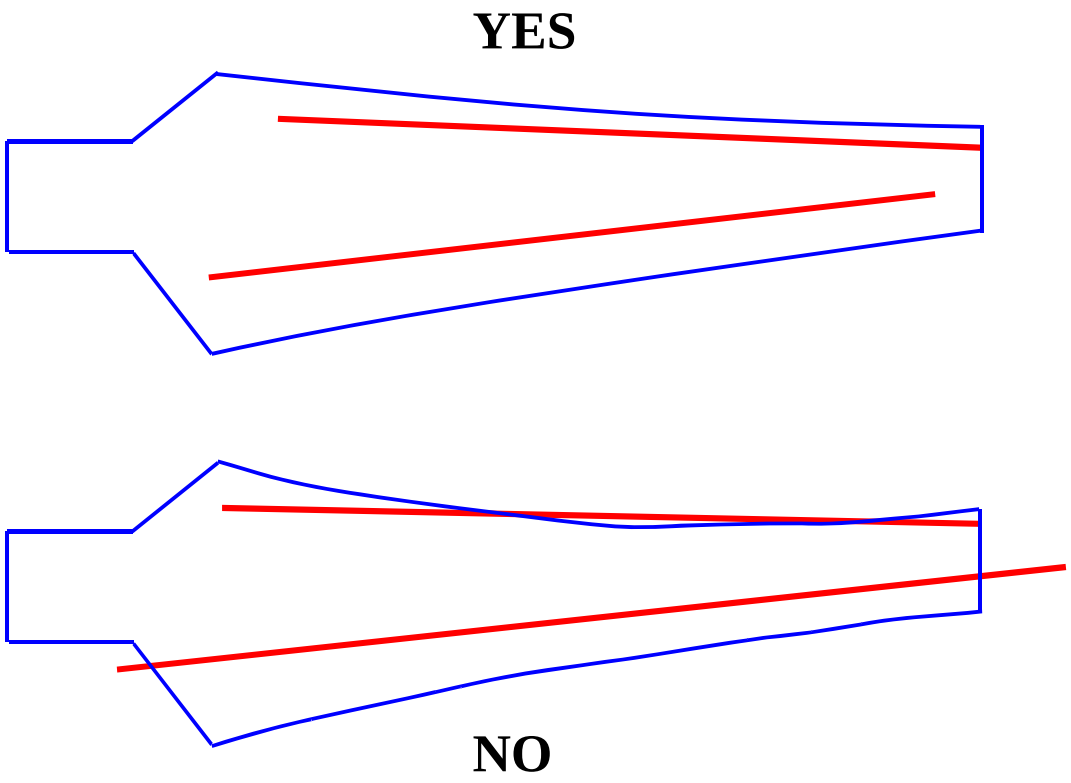

Computation of Properties

- Structural idealization:
  - Embed nodes where webs intersect with the airfoil
  - Model laminate segment bounded by two consecutive nodes as stack of flat laminas

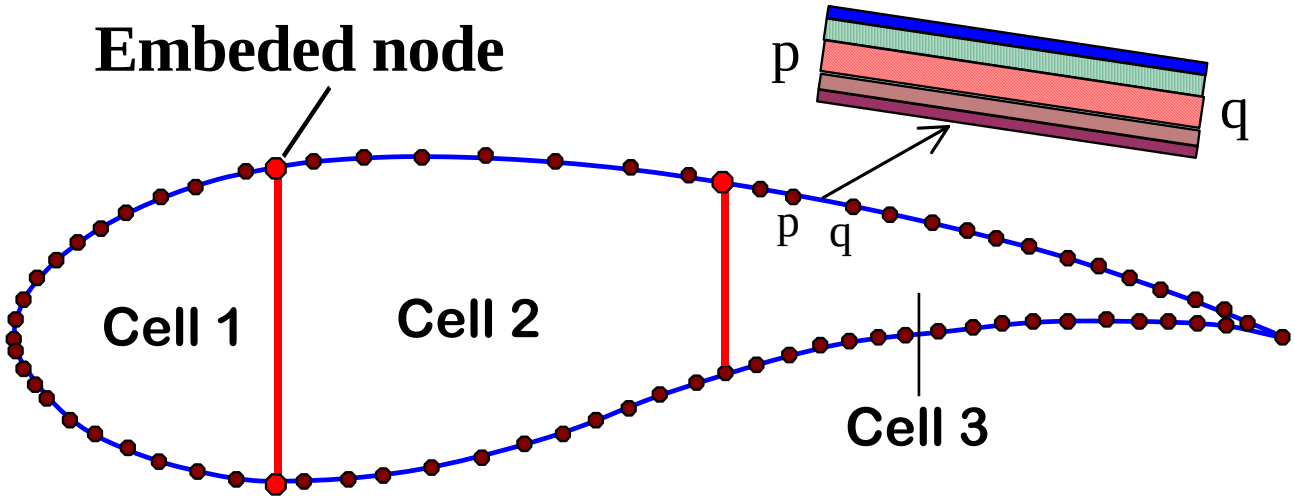

Computation of Properties (cont'd)

- Classical 3-D laminate theory does not account for certain boundary conditions
  - Leads to erroneous properties estimate, particularly for the torsion stiffness
- Developed a modified 2-D laminate theory
  - The torsion stiffness was still over-estimated by an order of magnitude.
- Developed a shear flow approach coupled with modified 2-D laminate theory

Computation of Properties (cont'd)

- Coupled modified laminate theory with the shear flow approach → structural properties
- Underlying assumptions:
  - Thin-walled closed section
  - No hoop stresses
  - No transverse-load-induced shearing
  - Free warping
  - Straight blade (no built-in curvature)
  - Webs normal to chord

Properties computed at each section

- Direct Stiffness terms (shown in blue)
- Cross-Stiffness terms: (shown in red)

$$S_{af} = (sc)_z * \overline{EA}$$
$$S_{al} = (sc)_y * \overline{EA}$$

$$\begin{bmatrix} \overline{EA} & S_{af} & S_{al} & S_{at} \\ S_{af} & \overline{EI}_{flap} & S_{fl} & S_{ft} \\ S_{al} & S_{fl} & \overline{EI}_{lag} & S_{lt} \\ S_{at} & S_{ft} & S_{lt} & \overline{GJ} \end{bmatrix}$$

- Offsets: $(sc)_y$, $(sc)_z$, $(cm)_y$, $(cm)_z$, $(tc)_y$, $(tc)_z$
- Inertias: m, I_{flap}, I_{lag}
- Orientation of principal axes: $\Theta_{inertia}$

PreComp Features

- Runs fast
- Allows
  - Arbitrary variation of chord, twist, and airfoil geometry along the span
  - Arbitrary number of webs
  - Fairly general layup of composite laminas
- Assumes free warping
  - Possibly invalid near the root
  - Restrained warping can alter torsional stiffness
  - Best captured by a detailed 3-D FE model

PreComp Features (cont'd)

- Computes structural properties directly
  - outputs these in a tabular form.
- FE approach requires
  - generation of load-displacement data
  - post-processing
  - expertise

  BPE is an example of post-processing tool that extracts structural properties from an FE model.
- Easy to interface with aeroelastic codes.

PreComp Features (cont'd)

- Provides structural properties for 1-D modeling of blades
  - required by aeroelastic codes
- Does not provide 3-D stress or displacement distribution which is
  - required for final refined design
  - best obtainable from a FE model, e.g. a NuMAD-generated ANSYS model

Sample Result

Beam with Elliptical Section

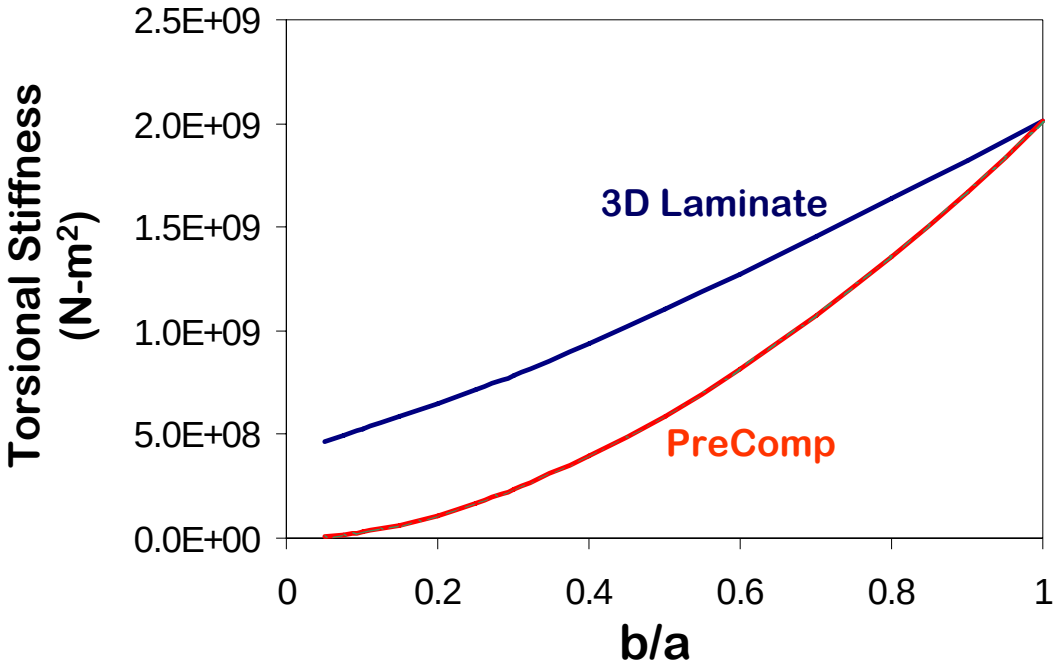

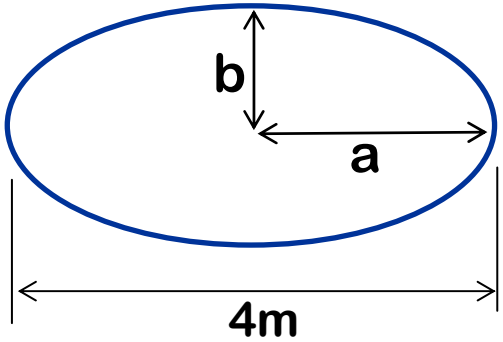

b/a	0.25	0.2	0.15	0.1	0.075	0.05
3D-Laminate	7.18E+08	6.50E+08	5.86E+08	5.25E+08	4.96E+08	4.68E+08
PreComp	1.66E+08	1.10E+08	6.36E+07	2.93E+07	1.68E+07	7.59E+06
Analytical	1.66E+08	1.10E+08	6.36E+07	2.93E+07	1.68E+07	7.59E+06

Using PreComp

- Prepare input files:
  - main input file (*exmp: demo.pci*)
  - files describing internal structural layout at specified blade sections (*exmp: int01.inp*)
  - files describing airfoil geometry at specified sections (*exmp: af-12.inp*)
- Run precomp

  precomp ***.pci
- Computed properties are listed output files:

  ****.out_gen* and/or ****.out_bmd*

Note: material properties are stored in *materials.inp*

Ongoing Work

Development of PreComp-2

- New theory basis that accounts for blade section in-plane distortion (Brazier effect)
- Revised inputs, which allow
  - Arbitrary geometry of webs: arbitrary layout along the span and arbitrary orientation with respect to the chord planes
  - Easier specification of sector (laminate) boundaries: specified via nodes
- Formulation extension for stress analysis
- Implementation of the new formulation (in progress)

Future Plans

- Complete computer coding of PreComp-2
- Perform verifications (and validation if reliable experimental data becomes available)
- Publish results
- Write User's Manual. Post the manual, the code, and sample I/O files on NWTC website

Questions?

Current version of PreComp is available on NWTC website

Gunjit Bir

+1 (303) 384 – 6953
Gunjit_bir@nrel.gov