Systems Engineering Activities at Clemson University's International Center for Automotive Research (CU-ICAR) and Wind Turbine Drivetrain Testing Facility

Ryan F. Schkoda, Ph.D.
Postdoctoral Fellow
Wind Turbine Drivetrain Testing Facility
Charleston, SC

Public /Private Partnerships Focused on Meeting Industry's Needs

CUICAR

CLEMSON UNIVERSITY INTERNATIONAL CENTER FOR AUTOMOTIVE RESEARCH

- Full Scale Testing / Applied Research
- Multidisciplinary Education (MS & PhD)/ Workforce Development
- Collaboration with Industrial Partners and Government
- Protection of Customer Intellectual Property

Changing Focus of Automotive Engineering

CU-ICAR Research Activities

Professor	Field	Research
Johnell Brooks	Phys	Abnormal Human-Automotive Interaction and aging driver studies
Pierluigi Pisu	EE	Develop a real-time in-vehicle energy management control strategy
David Smith	CE	Rapid prototyping of vehicle cockpit for human-technology interaction
Paul Venhovens	ME	Deep Orange

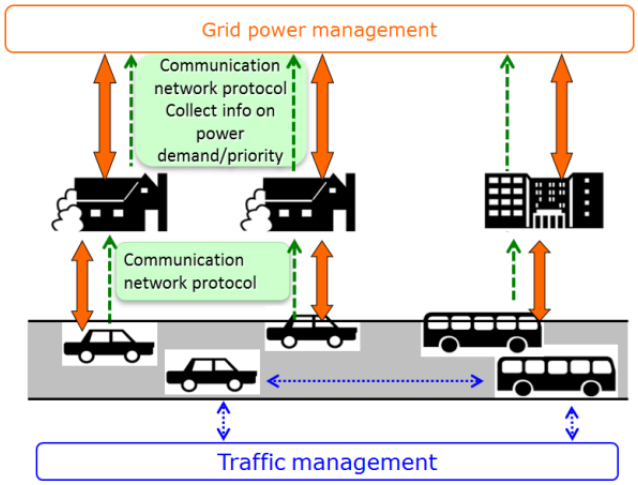

Deep Orange: Innovations in Automotive Engineering Education

Dr. Paul Venhovens
Background: Mechanical Engineering

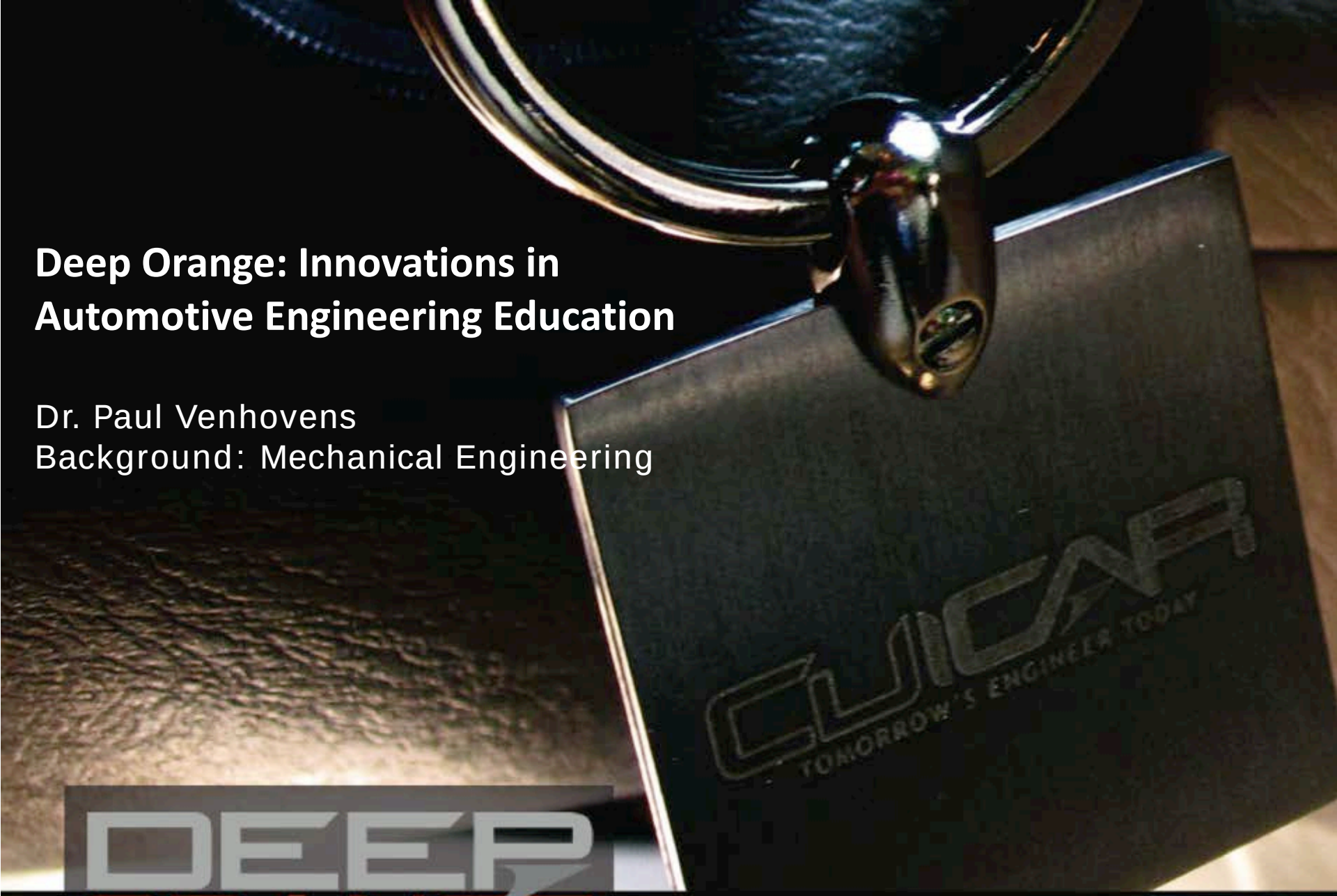

DEEP ORANGE

Deep Orange: A New Teaching Paradigm

Market Analyses

Start: Day 1

System Design

Day 193

New prototype vehicle releases from two-year Development Cycles

Target Validation
Graduation

An integral feature of our MS/PhD Research & Education Program

Validation

End: Day 712

System Integration

Day 523

A Neutral Platform for Academic, Industry and Government Collaboration

Innovations that will be Integrated, Proven and Showcased

Collaboration with the Art Center College of Design, Pasadena, CA

Business model based on proven CU-ICAR model

- Multidisciplinary
- Full Scale Testing
- Applied Research
- Graduate Education

CU ICAR
CLEMSON UNIVERSITY INTERNATIONAL CENTER FOR AUTOMOTIVE RESEARCH

CLEMSON UNIVERSITY
WIND TURBINE DRIVETRAIN TESTING FACILITY

+ Zucker Family Graduate Education Center

Automotive Engineering

Energy Systems

WTDTF Overview

Objective: Accelerate the development of new technology into the wind market to reduce the cost of energy delivered.

Mission: Provide (1) High Value, (2) High Quality and (3) Cost Competitive testing and validation services to industry.

Establish long term partnerships with industry for work force development, research and education.

Rendering vs. Actual

- 7.5 MW gearbox on test stand

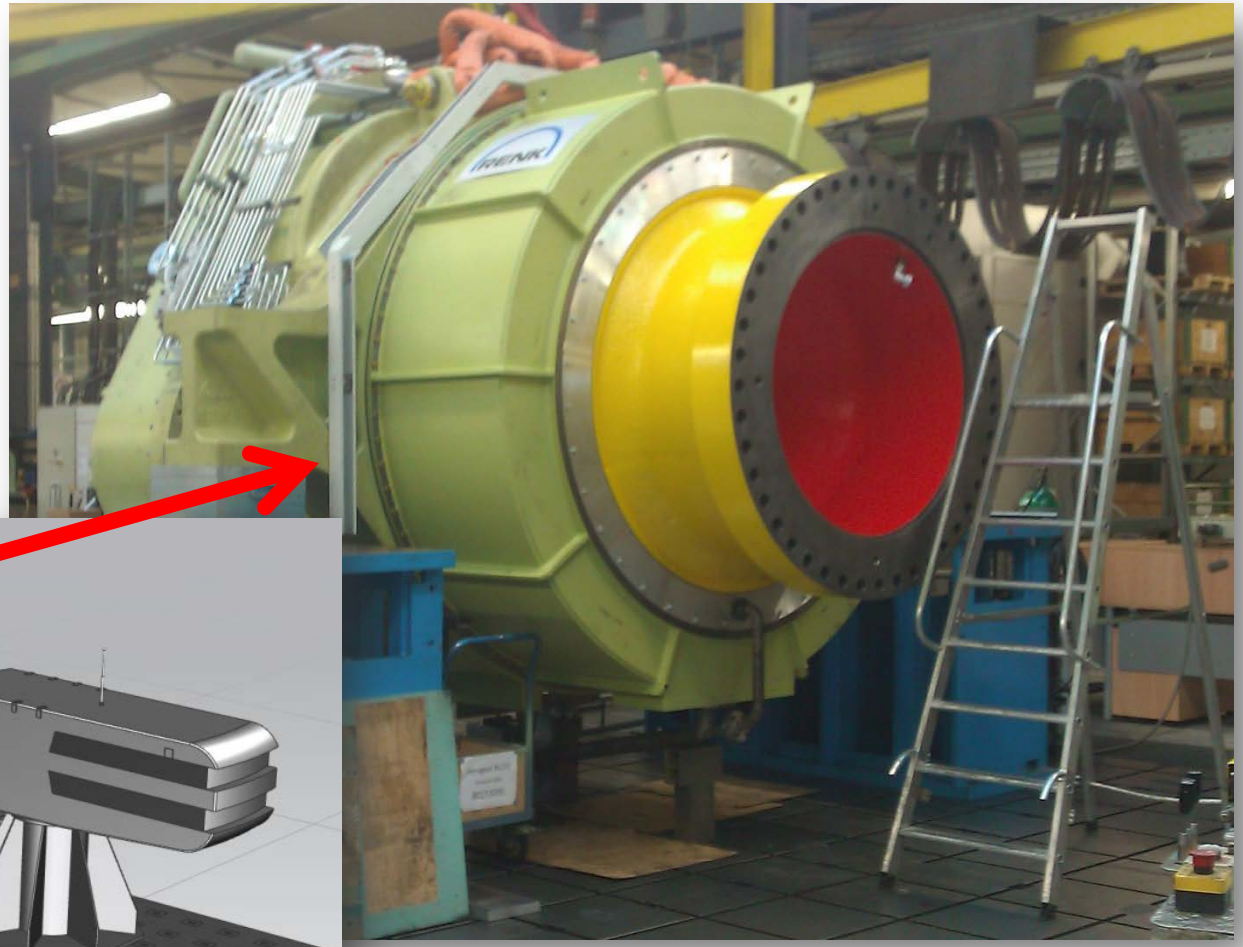

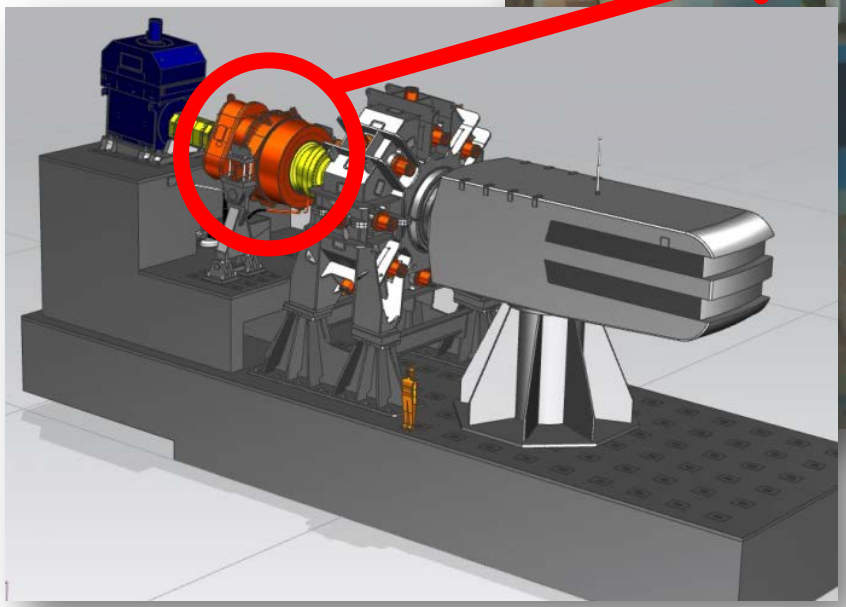

Rendering vs. Actual

- Load application unit housing being assembled
- Notice people in both images

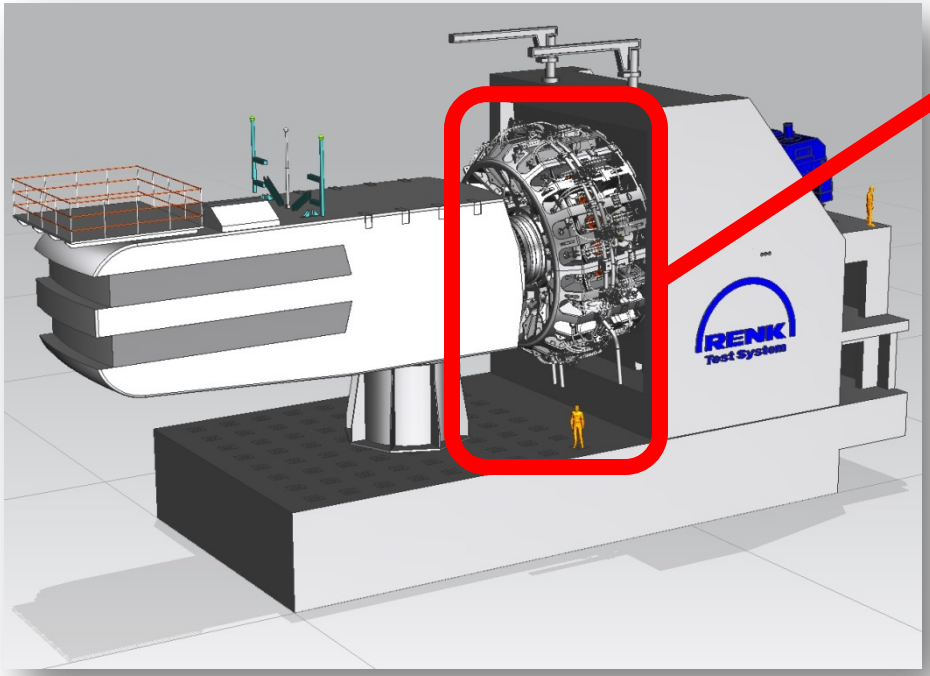

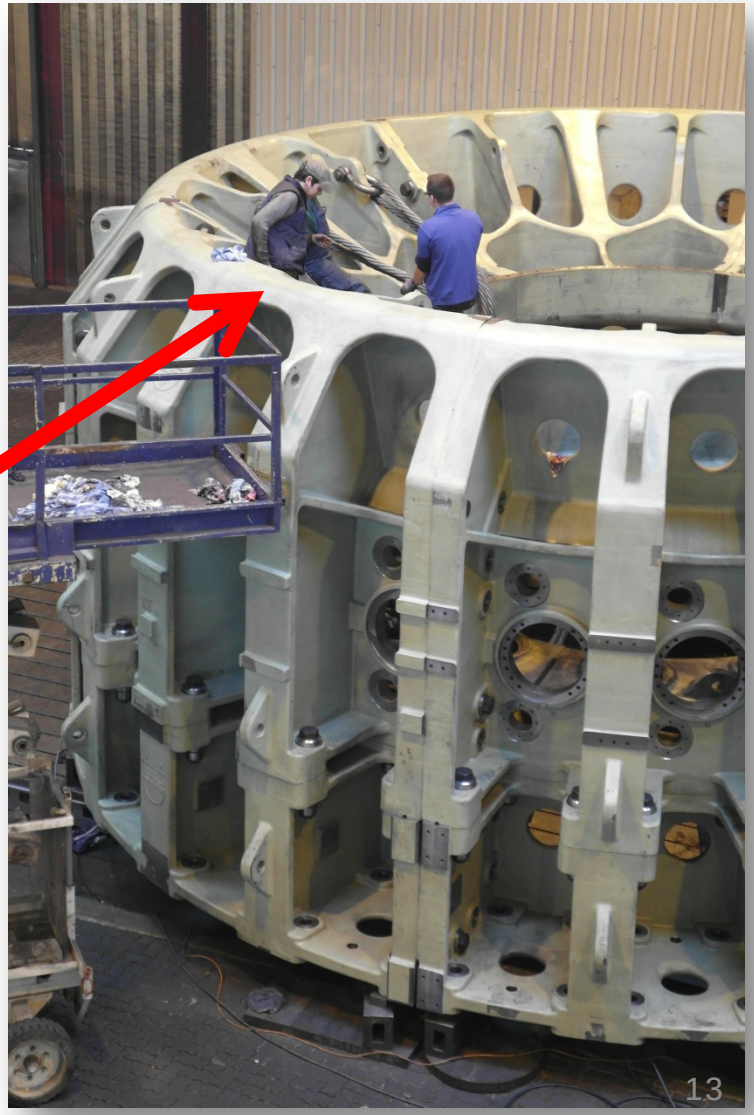

Dynamic Systems Modeling

Mechanical

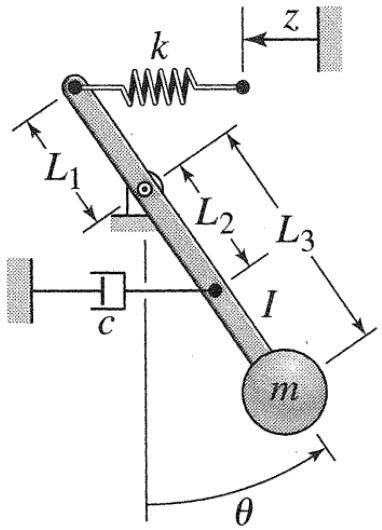

Electrical

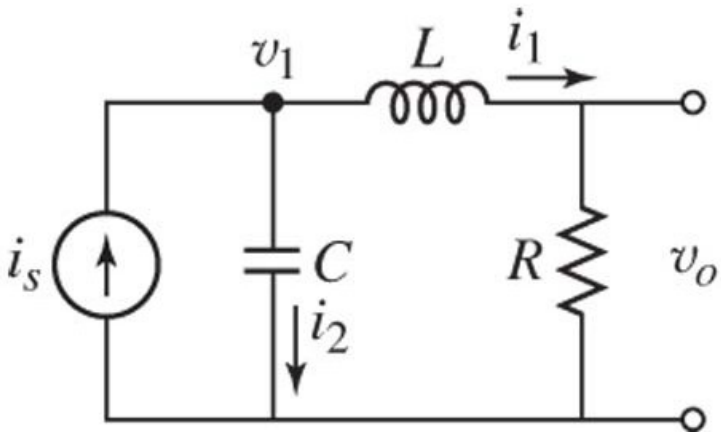

Fluid

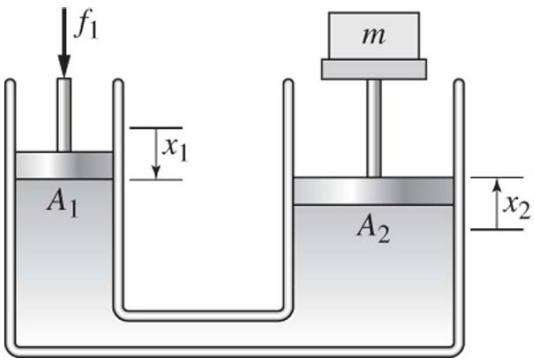

Thermal

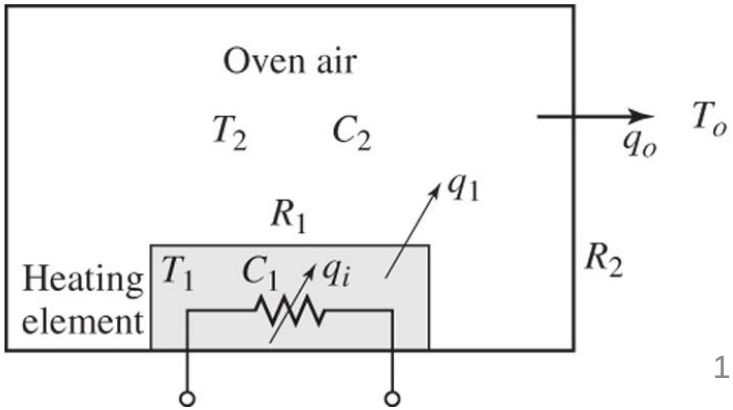

Control Loop Concept

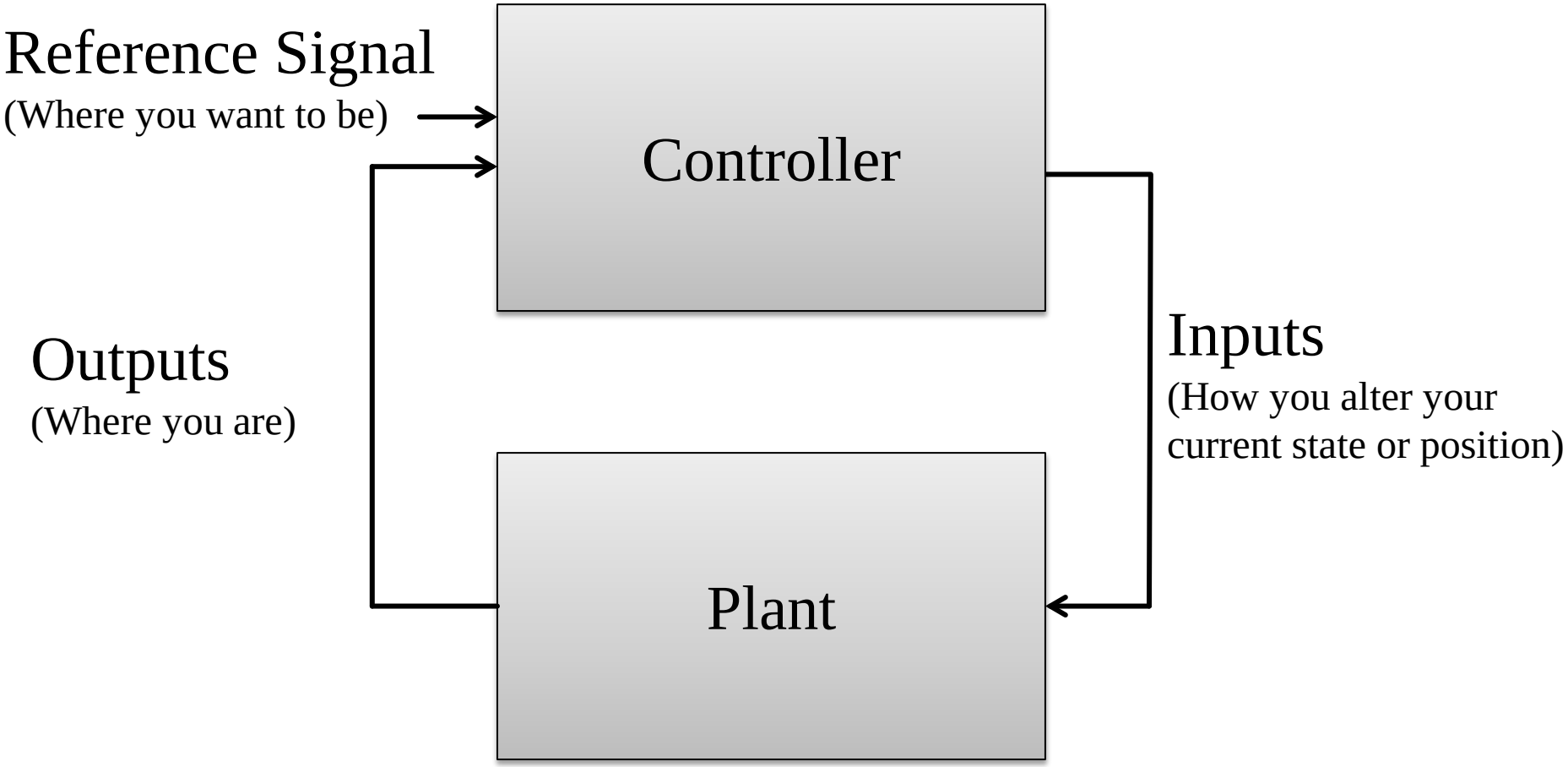

Integrated Test Rig Model

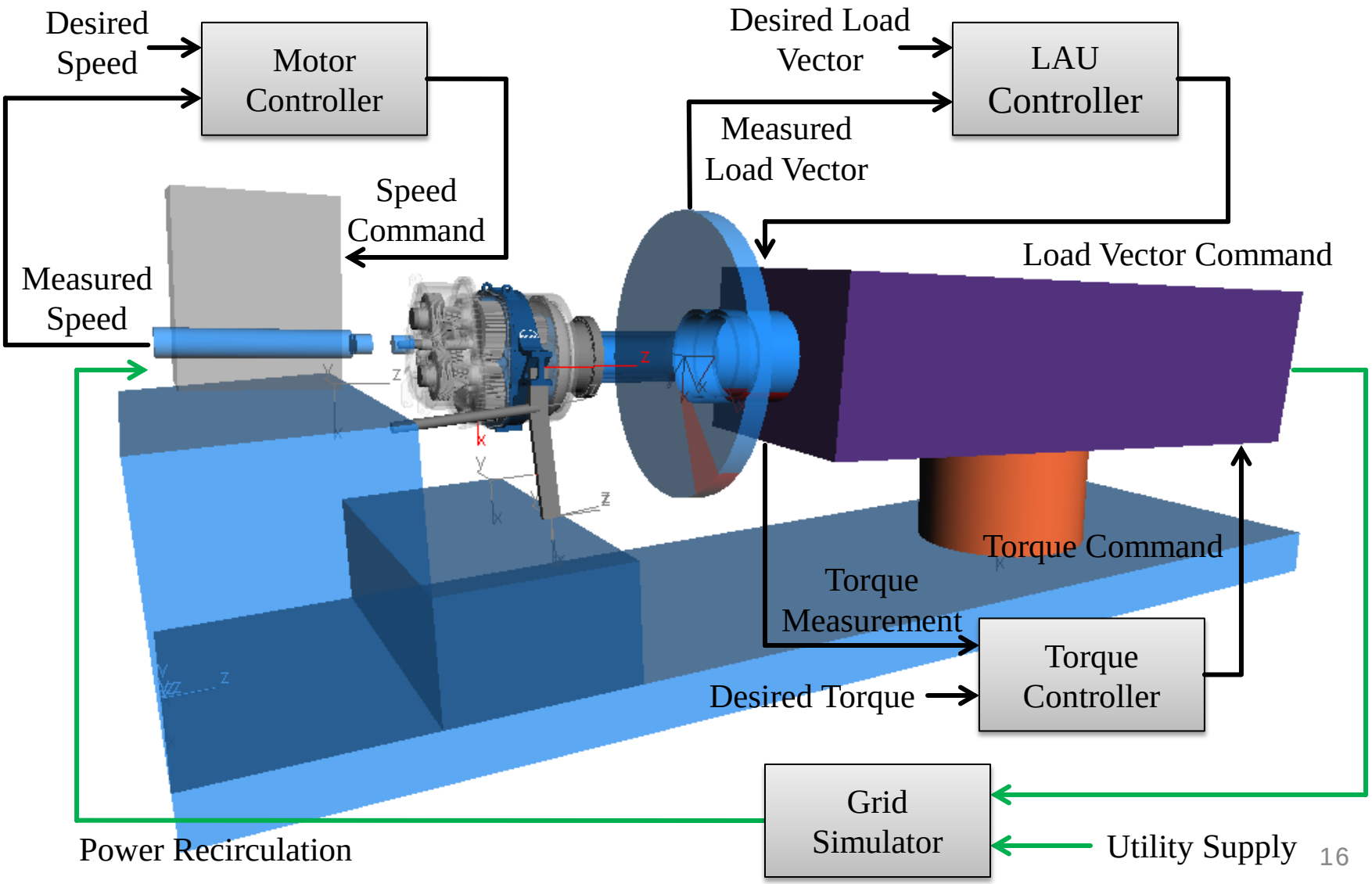

Modeling Objectives

1. Characterize the accuracy of the load application unit and determine how non-torque loading affects the test bench and unit under test.
2. Develop both linear and non-linear models for the test bench and unit under test that capture time domain behavior (transient and steady state) and frequency domain behavior (vibration and limit cycle).
3. Simulate and evaluate automated behavior such as automated test sequence execution and purposely tripping automatic safety systems.

1. Characterize the stiffness of the test bench and the unit under test.
2. Analyze individual control system performance as well as the interaction between the various different controllers.
3. Model the various hydraulic systems including the hydraulic pumps, the load application unit's force actuation pistons, the hydraulic slide bearings, and the lubrication systems.
4. Quantify the resultant load vectors acting on the bearings throughout the test rig and unit under test.
5. Evaluate and improve model fidelity.

1. Develop nacelle models specific to customer test articles as opposed to generic or general purpose nacelle models.
2. Seek an in depth understand of how the high speed shaft behaves and affects the components it is attached to.
3. Simulate instantaneous power loss and heat rejection during operation.

High Priority Middle Priority Low Priority

Model Development Strategy

- Always use the best modeling environment for the particular task
- Fully exploit data exchange or co-simulation capabilities

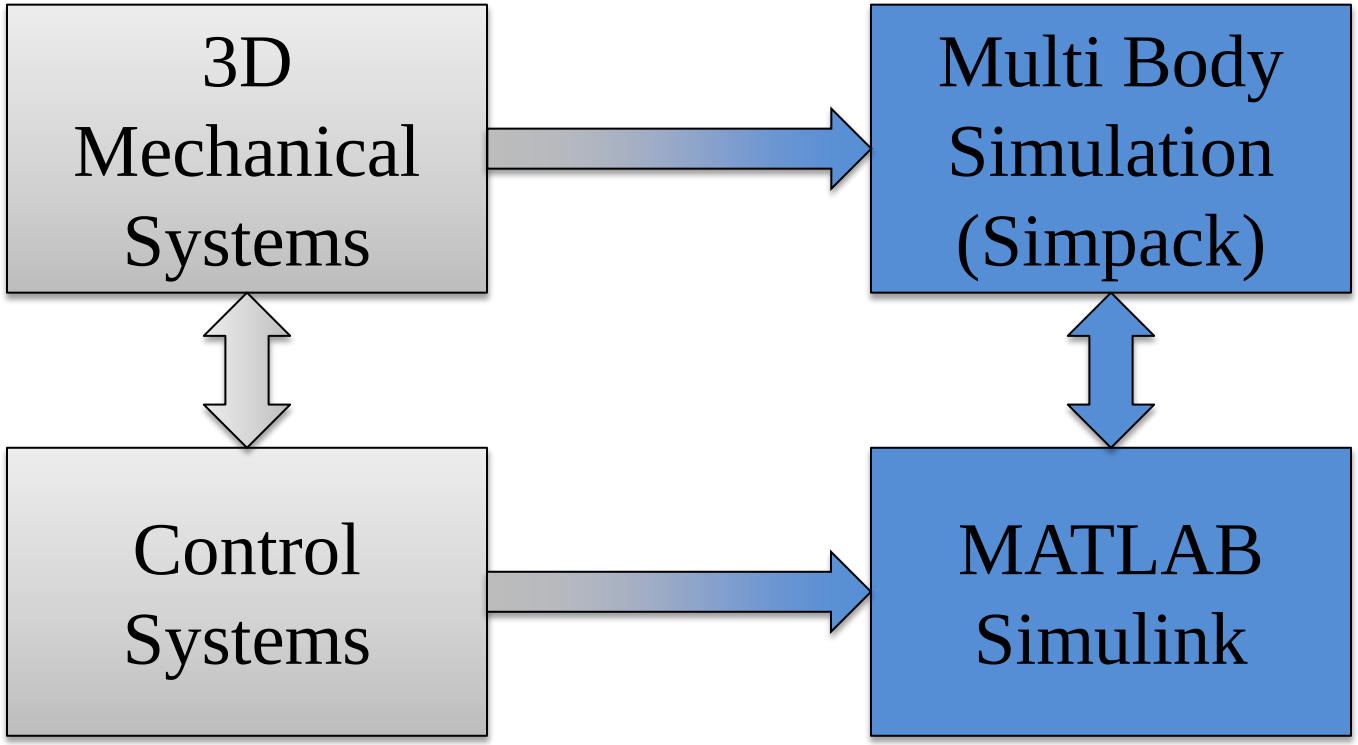

Virtual Operation Visualization

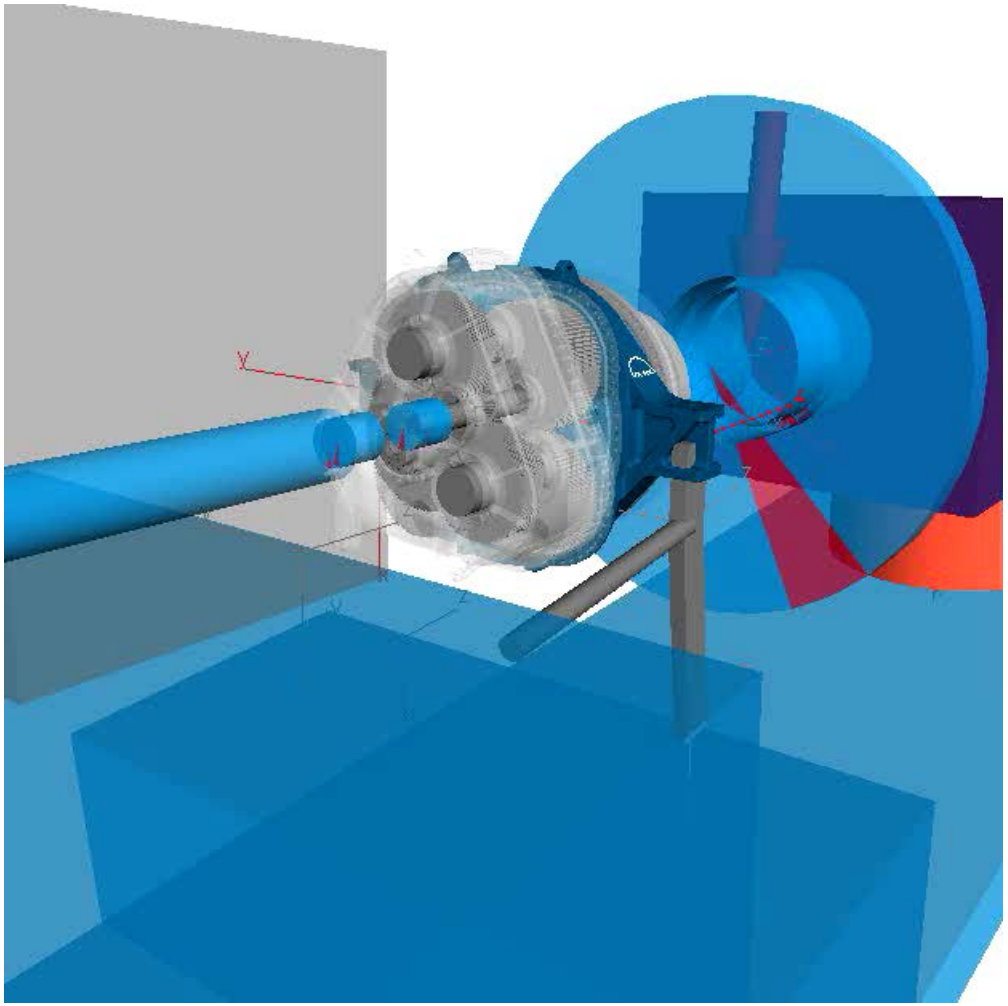

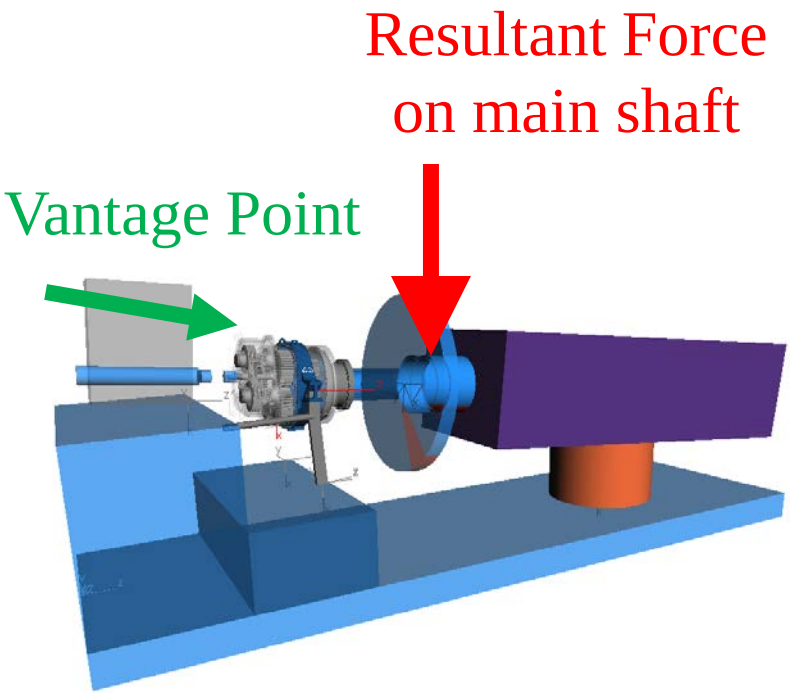

- Simultaneous Multi-body and control system simulations

Analysis Approach Comparison

Analysis Approach

Pure Simulation → Hardware in the Loop → Test Bench → Field Testing → Farm Operation

Cost

$ $$ $$$ $$$$ $$$$$$

Validity

Less → More

Duration

Short → Long

Hardware in the Loop

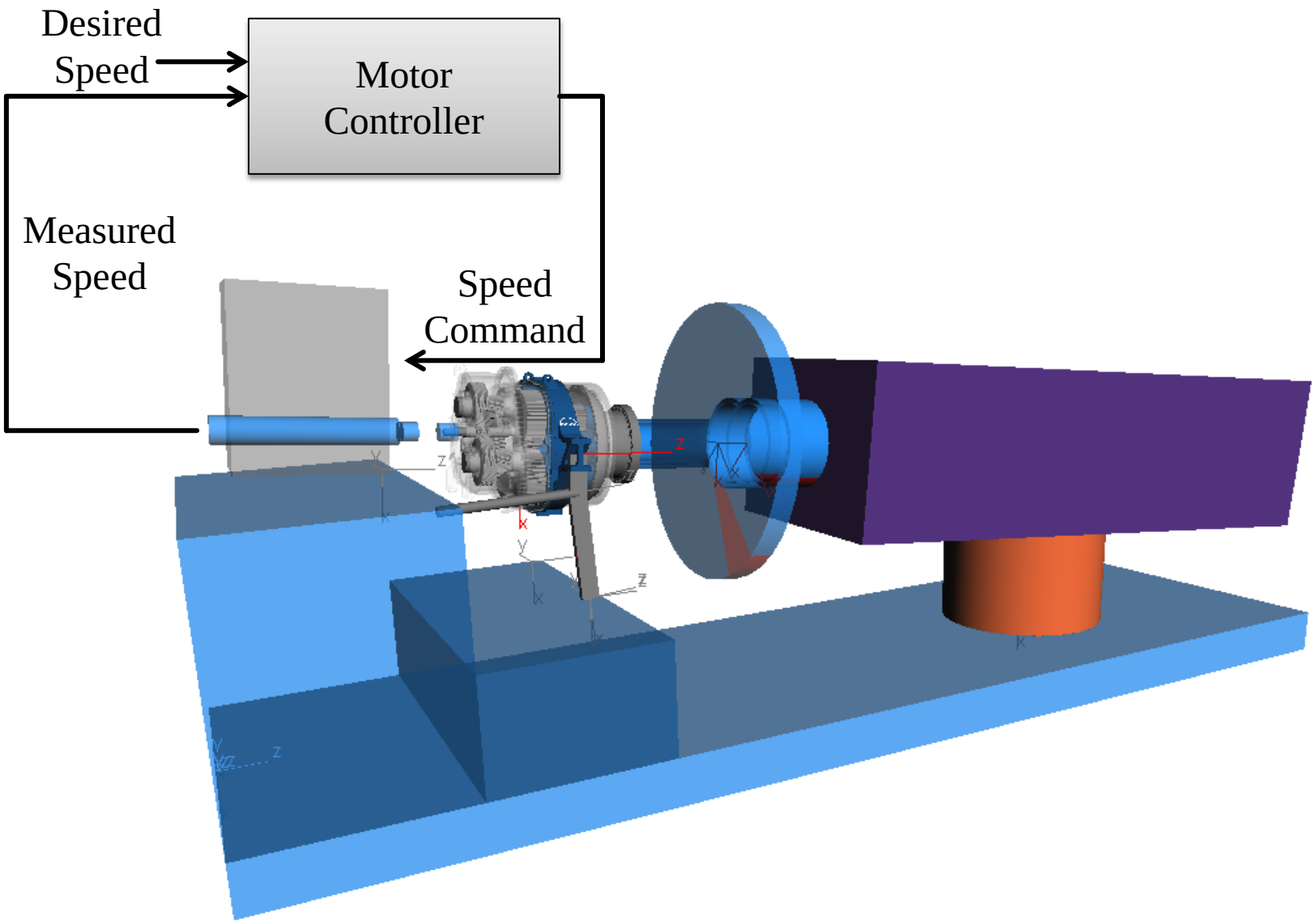

Hardware in the Loop

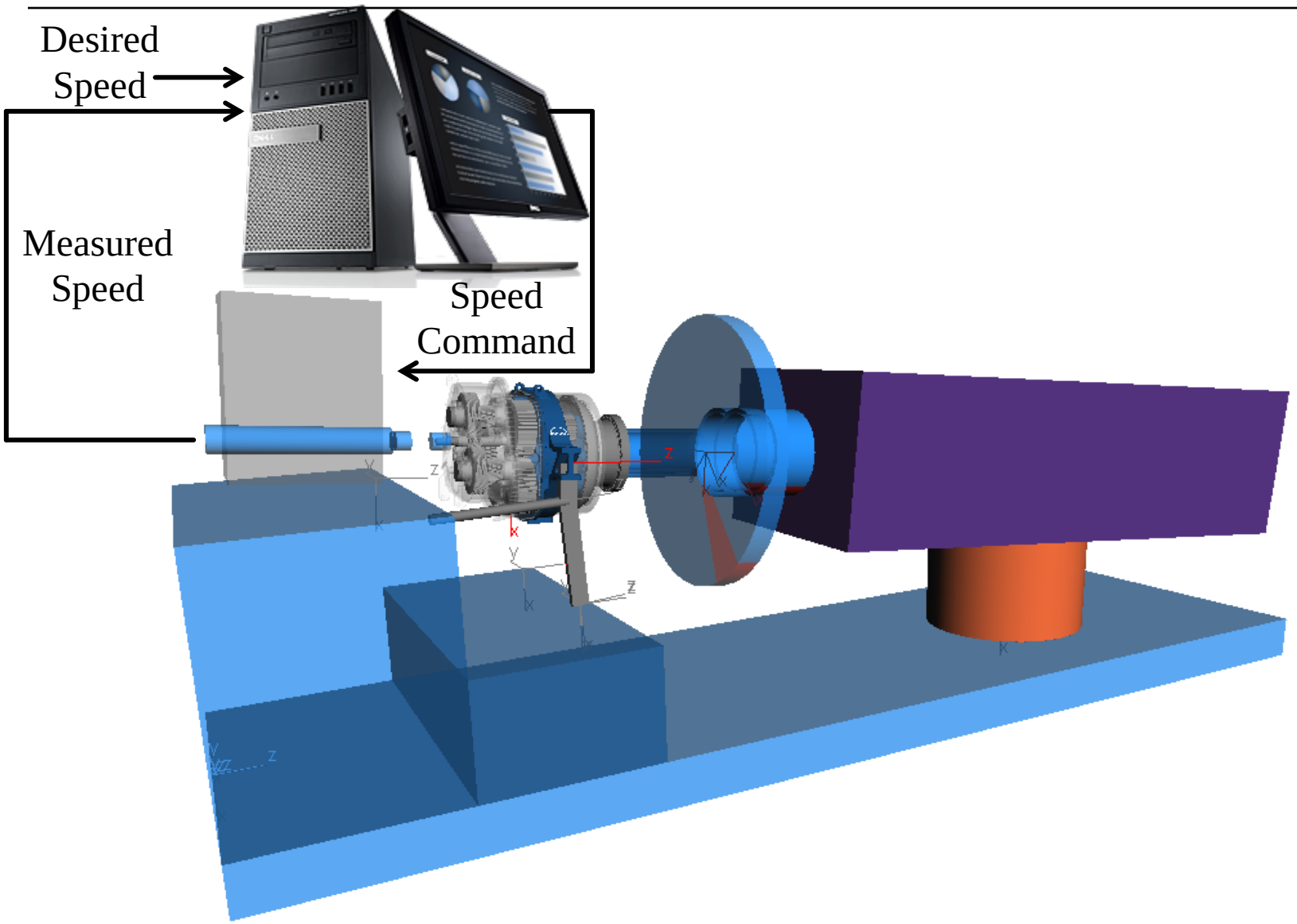

Hardware in the Loop

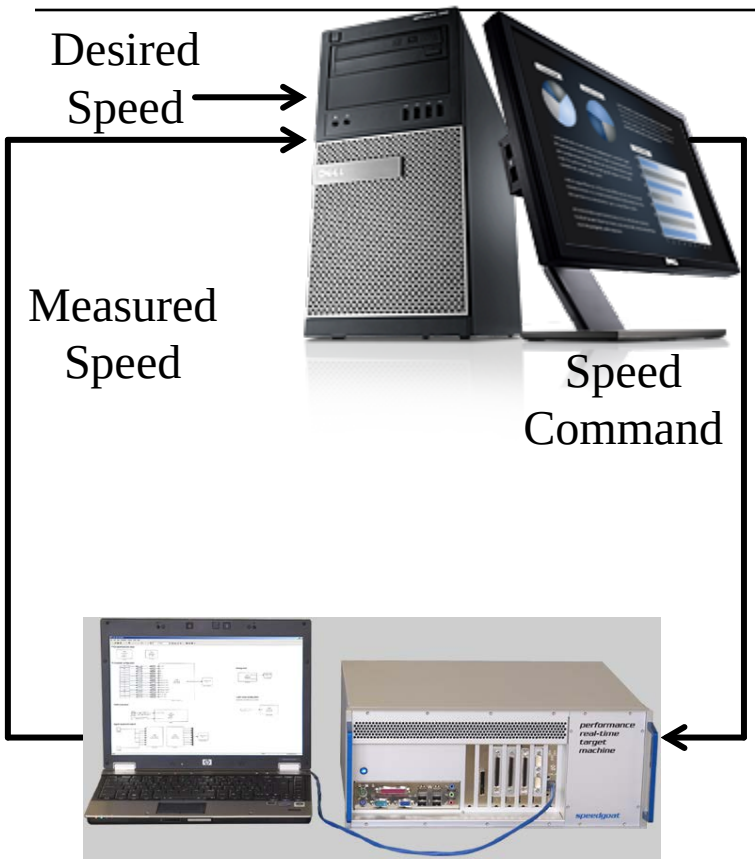

- Control Hardware is now “in the loop.”
- Cost effective…
- Faster…
- Safer…
- And more flexible than using actual equipment
- Low risk (actual) equipment exercised with simulation of high risk equipment

Comprehensive and Virtual Test Operation

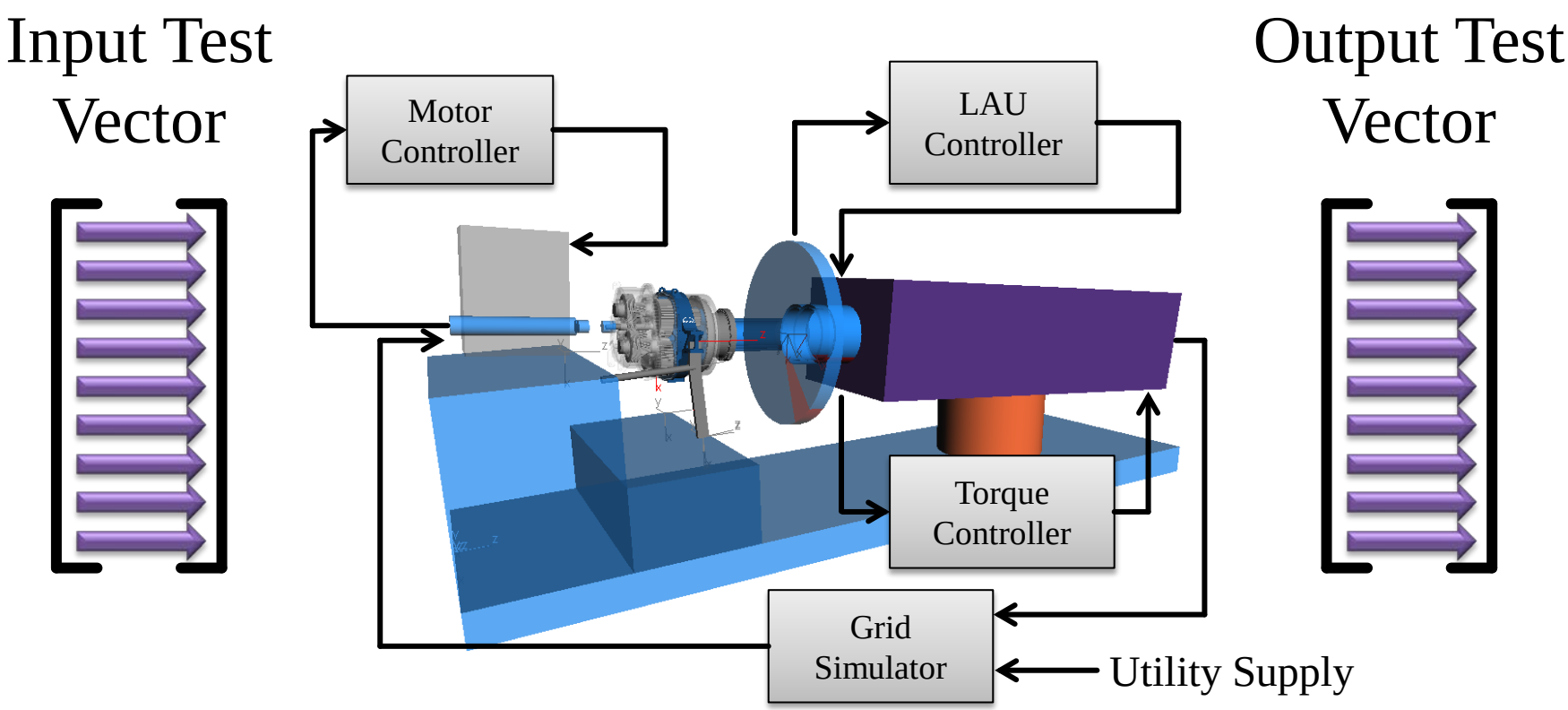

Thank you