U.S. DEPARTMENT OF ENERGY | Energy Efficiency & Renewable Energy

Systems Engineering Workshop – DOE's Perspective

Nick Johnson

Modeling and Simulation Lead

U.S. Department of Energy

Wind & Water Power Program

Introduction

- Welcome
- DOE's Mission
- DOE's Role
- Wind Power Program Priorities

Administration & DOE Priorities

U.S. DEPARTMENT OF ENERGY | Energy Efficiency & Renewable Energy

White House

- Generate 80% of the nations' electricity from clean energy sources by 2035
- Reduce carbon emissions 80% by 2050
- Stimulate jobs and economic recovery through RE development

DOE

- Promote energy security through reliable, clean, and affordable energy
- Strengthening scientific discovery and economic competitiveness through science and technology innovation

EERE

- Invest in clean energy technologies that strengthen the economy, protect the environment, and reduce dependence on foreign oil

WWPP

- Improve the performance, lower the costs, and accelerate deployment of innovative wind and water power technologies

The ***mission*** of the Wind Power Program is to enable U.S. deployment of clean, affordable, reliable and domestic wind power to promote national security, economic growth, and environmental quality

Wind Program Strategic Overview

U.S. DEPARTMENT OF ENERGY | Energy Efficiency & Renewable Energy

Program Mission

- Enable U.S. deployment of clean, affordable, reliable, and domestic wind power to promote national security, economic growth, and environmental quality

Program Priorities

- Aerodynamics and wind complex flow analysis to improve overall plant performance
- Offshore wind technology and deployment
- Wind manufacturing defects analysis
- Mesoscale data acquisition
- Wind turbine inflow characterization
- Turbine to turbine interaction analysis
- Grid integration analysis
- Institute regional wind resource centers

Key Focus Areas

- Maximize wind plant performance to reduce LCOE
- Establish a competitive U.S. offshore wind industry
- Optimize grid integration and transmission for wind systems
- Mitigate market barriers

Targeted Outcomes

- Reduce the unsubsidized market LCOE for utility-scale land wind energy systems from a reference wind cost of $.071/kWh in 2010 to $.057/kWh by 2020 and $.042/kWh by 2030
- Reduce the unsubsidized market LCOE for offshore fixed-bottom wind energy systems from a reference of $.225/kWh in 2010 to $.167/kWh by 2020 and $.136/kWh by 2030
- 47 GW of total U.S. wind installed capacity in 2011 to 125 GW of wind capacity by 2020 and 300 GW by 2030

DOE's Role

Importance of EERE Wind Program's Unique Role

- **RDD&D not being undertaken by the U.S. wind industry**
- **High risk, transformational technological innovations**
- **Different time-scales and/or engage comprehensive competencies**
  - NWTC
- **Inter- and intra-governmental agency issues**
  - The Department of Defense, Department of Health and Human Services, Department of Transportation, Department of Interior, and other agencies.

DOE Wind Industry Role

Interagency government coordination to accelerate deployment

- Collaboration on Permitting barriers with BOEM, FWS, DHS/DOD/FAA, others
- Collaboration on transmission planning and integration with FERC and OE

Funding to benefit Industry

- National Testing Facility infrastructure
- Certification and standards for small wind
- Publicly available national datasets for wind resource data

Perceived High Risk/Long-term R&D Projects

- Offshore Demonstration project
- Next Generation drive-train
- Next Generation wind plants

Accelerate Administration priorities

- Investments in Manufacturing Innovation /U.S. Competitiveness
- R&D targeted on addressing renewables integration and transmission planning challenges

Wind Program Portfolio
Transformational Technology Innovation

U.S. DEPARTMENT OF ENERGY | Energy Efficiency & Renewable Energy

The Wind Program performs **Research and Development of Transformational Technology Innovation** in three markets:

Land Based Utility Wind

- 1-5+ MW turbines
- R&D Focus: Next generation turbine cost reductions, improved energy capture & conversion at an "Integrated Wind Plant" level, advanced controls, extended useful life of components

Offshore Wind

- 3-10+ MW turbines
- R&D Focus: Floating platforms (access higher winds); integrated systems designs (reduce full plant LCOE); optimized O&M strategies (reduce costs, extend life); turbine innovations (less constraints than on land) including rotor, next generation drivetrain and control systems

Distributed Wind

- < 1 MW turbines, Grid connected on the customer side of the meter
- R&D Focus: Optimized for low Class 3/Class 2 wind speeds, very low maintenance, LCOE reduction to compete with retail

Past Wind Program Projects

U.S. DEPARTMENT OF ENERGY | Energy Efficiency & Renewable Energy

- National Wind Technology Center (NWTC) Drive Train Testing Facility (2009)
  - $10M DOE investment
  - 5MW capacity
  - Grid simulator

- Next Generation Drivetrain (2012)
  - Mid-speed drivetrain (NREL)
  - Fully superconducting generator (Advanced Magnet Lab)

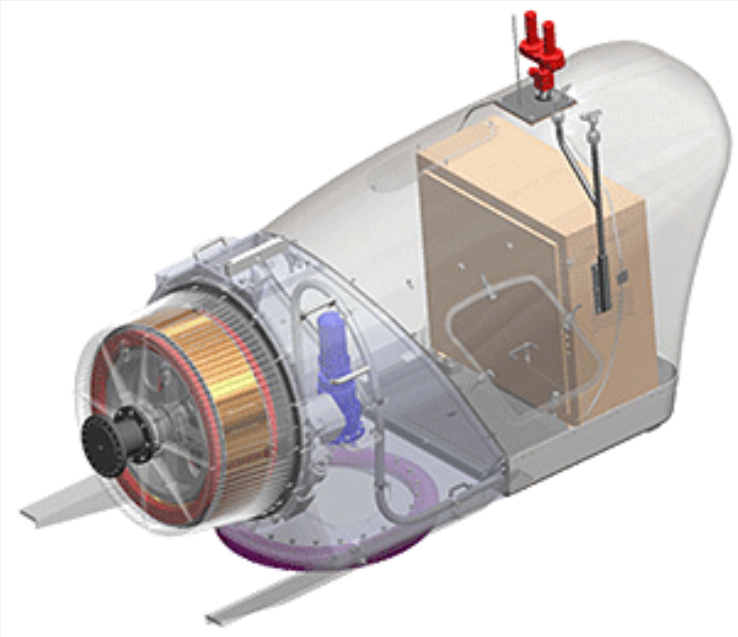

Past Wind Program Projects

U.S. DEPARTMENT OF ENERGY | Energy Efficiency & Renewable Energy

- Clemson University Restoration Institute (CURI) Drive Train Test Facility (2009)
  - $45M investment from DOE
  - 7.5MW and 15MW capacity
  - Grid simulator

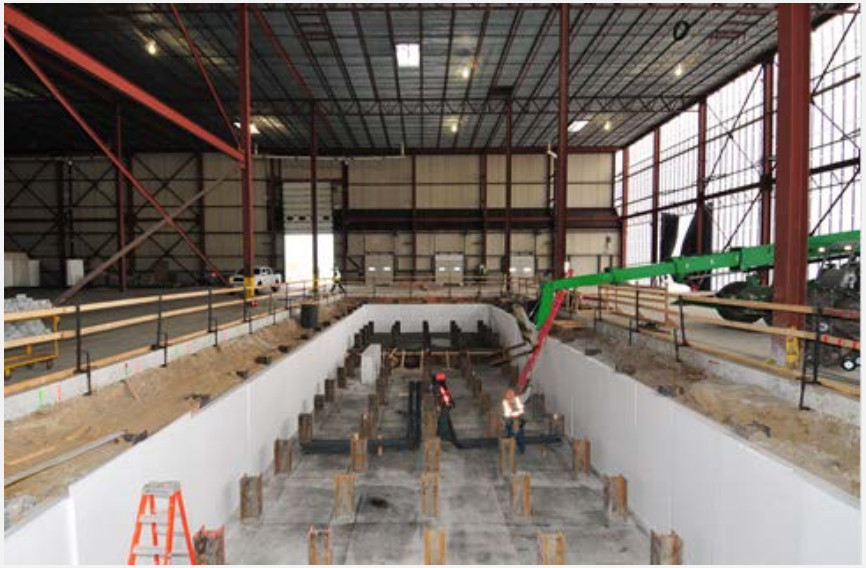

Past Wind Program Projects

U.S. DEPARTMENT OF ENERGY | Energy Efficiency & Renewable Energy

- Offshore Wind Demonstration FOA projects (2013)
  - 7 projects
  - Achieve large cost reductions over existing offshore wind technologies

Past Wind Program Projects

U.S. DEPARTMENT OF ENERGY | Energy Efficiency & Renewable Energy

- Scaled Wind Farm Technology (SWIFT) facility (2013)
  - 3 Vestas V27 turbines
  - Turbine to turbine interaction

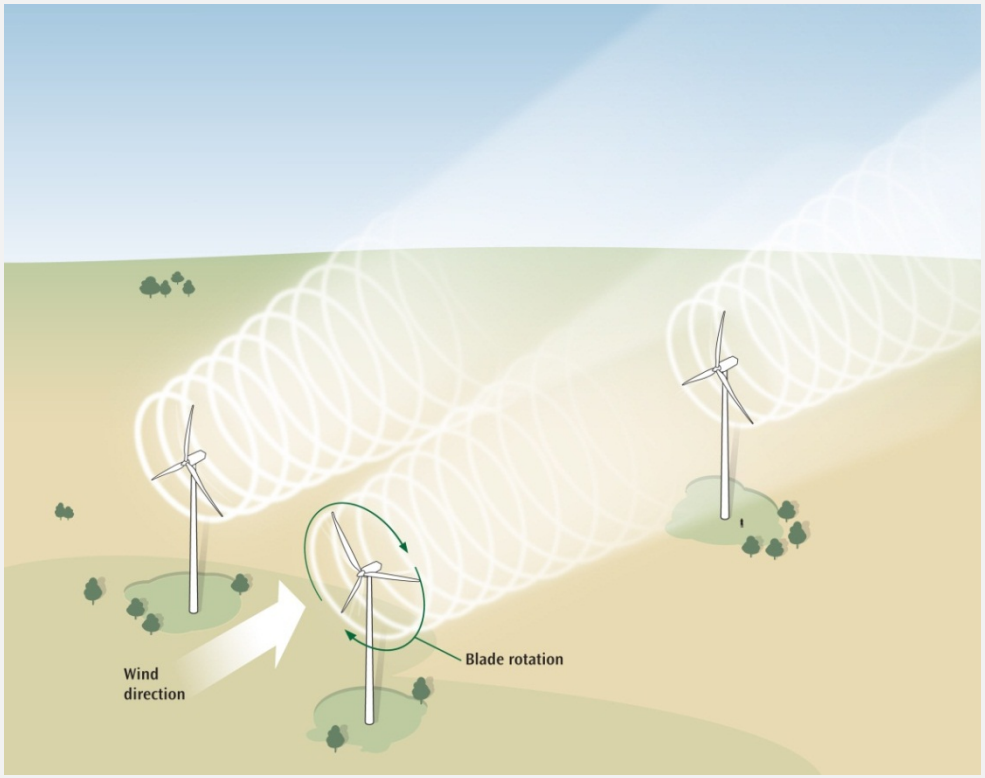

Wind Program Going Forward

U.S. DEPARTMENT OF ENERGY | Energy Efficiency & Renewable Energy

Building Blocks

Prior Year Priorities	FY 14-18 Priorities
Component optimization (turbine LCOE)	System-level wind plant performance optimization (plant LCOE)
American Reinvestment and Recovery Act investments (ARRA)	Leverage U.S. manufacturing and U.S. domestic component production
Begin offshore wind initiative	Focus on major offshore wind demonstration project and creating a sustainable U.S. offshore wind industry
Grid integration and resource characterization	EERE-level cross-program collaboration on optimizing grid integration for RE sector
Barriers, siting and permitting (stakeholder engagement)	Increased effort on reducing barriers impacting wind class, including radar-related barriers, to reduce LCOE